HP LTO Ultrium tape drives technical reference manual

Volume 3: Host interface guide

LTO 4 drives

Edition 1, June 2007

invent

Legal and notice information

© Copyright 1999–2007 Hewlett-Packard Development Company, L.P.

Hewlett-Packard Company makes no warranty of any kind with regard to this material, including, but not limited to, the implied warranties of merchantability and fitness for a particular purpose. Hewlett-Packard shall not be liable for errors contained herein or for incidental or consequential damages in connection with the furnishing, performance, or use of this material.

This document contains proprietary information, which is protected by copyright. No part of this document may be photocopied, reproduced, or translated into another language without the prior written consent of Hewlett-Packard. The information is provided "as is" without warranty of any kind and is subject to change without notice. The only warranties for HP products and services are set forth in the express warranty statements accompanying such products and services. Nothing herein should be construed as constituting an additional warranty. HP shall not be liable for technical or editorial errors or omissions contained herein.

Printing history

Version	Edition	Date	Changes
LTO 4	Edition 1	June 2007	LTO4 FC, SCSI and SAS version

This document is frequently revised and updated. To find out if there is a later version, please ask your HP OEM Representative.

HP LTO Ultrium 4 tape drives technical reference manual, volume 3: host interface guide

Contents

The purpose of this manual . . . 9
Related documents . . . 9
Documents specific to HP LTO Ultrium drives . . . 9
Documentation map . . . 9
Drives—general . . . 9
Installation and configuration . . . 9
Operation . . . 10
Cartridges . . . 10
Interface . . . 10
Maintenance and troubleshooting . . . 11
Dealing with errors . . . 11
LTO Ultrium features . . . 11
General documents and standardization . . . 12

1 Interface Implementation . . . 13
The Fibre Channel interface . . . 13
Supported task management functions . . . 13
The SCSI interface . . . 14
Supported messages . . . 14
The SAS interface . . . 15
Supported task management functions . . . 15
Supported commands . . . 15
SCSI features . . . 16
Design approach . . . 16
Power-on . . . 16
Reset strategy . . . 17
Abort handling . . . 17
LUN identification (SCSI only) . . . 19
Bus parity or CRC errors *(SCSI only)* . . . 19
Disconnect strategy *(SCSI only)* . . . 19
Link error handling *(SAS drives)* . . . 20
Multi-initiator support . . . 22
Fibre Channel operation . . . 22
Fibre Channel addressing . . . 22
Names . . . 22
Addresses . . . 23
HP's implementation of names and addresses . . . 23
Implications for libraries . . . 24
Field replaceable units . . . 24
CD-ROM emulation *(SCSI and SAS drives only)* . . . 25

2 Messages . . . 27
Message Out support *(SCSI only)* . . . *27*
Message In support *(SCSI only)* . . . *28*
Extended Message support *(SCSI only)* . . . *29*
Status . . . 30

3 Response frames and task management functions . . . 33
Response frames . . . 33
Task management functions . . . 34

4 Commands—introduction . . . 37
Summary . . . 37
Command details . . . 37
Pre-execution checks . . . 38
Bad LUN check . . . 38
Deferred Error check . . . 38
Diagnostic Status check . . . 39
Fixed Bit check . . . 39
Flag Link check . . . 39
Illegal Command check . . . 39
Illegal Field/Request check . . . 39
Media Access check . . . 40
Media Information check . . . 40
Media Write check . . . 41
Parameter List check . . . 41
Reservation check . . . 41
Unit Attention check . . . 41
Command descriptor block . . . 42

5 Commands . . . 43
Enhanced FIRMWARE UPGRADE DOWNLOAD FIRMWARE SEGMENT . . . A4h (1Fh) 44
Enhanced FIRMWARE UPGRADE REBOOT . . . A4h (1Fh) 46
Enhanced FIRMWARE UPGRADE REPORT IMAGE INFO . . . A3h (1Fh) 47
ERASE . . . 19h 49
INQUIRY . . . 12h 50
INQUIRY data pages . . . 51
Vital Product Data pages . . . 55
Supported Vital Product Data Pages page . . . 55
Unit Serial Number page . . . 56
Device Identification page . . . 56
Defined identifiers . . . 57
Management Network Address VPD page . . . 59
Extended INQUIRY Data VPD page . . . 60
Mode Page Policy VPD page . . . 60
SCSI Ports VPD page . . . 62
Sequential Access Device Capabilities page . . . 64
Manufacturer-assigned Serial Number page . . . 65

TapeAlert Supported Flags page . . . 65
Drive Component Revision Levels pages . . . 66
LOAD/UNLOAD . . . 1Bh 68
LOCATE . . . 2Bh/92h 71
LOG SELECT . . . 4Ch 73
LOG SENSE . . . 4Dh 75
Log page format . . . 76
Supported Log Pages page . . . 77
Write Error Counters log page . . . 78
Read Error Counters log page . . . 78
Sequential Access Device log page . . . 79
Temperature log page . . . 79
DTD Status log page . . . 80
Very high frequency data (VHF) . . . 80
Very high frequency polling delay . . . 81
DTD primary port status . . . 82
TapeAlert Response log page . . . 84
Requested Recovery log page . . . 85
Recovery procedures . . . 85
Protocol-Specific Log page *(SAS drives only)* . . . *85*
TapeAlert log page . . . 87
Tape Usage log page . . . 89
Tape Capacity log page . . . 89
Data Compression log page . . . 89
Device Wellness Log page . . . 90
Performance Data log page . . . 91
Device Status log page . . . 91
MODE SELECT . . . 15h/55h 93
Mode parameter pages . . . 94
Mode page representation . . . 94
Mode data format . . . 95
Mode block descriptor . . . 97
Read-Write Error Recovery mode page . . . 98
Disconnect-Reconnect page . . . 99
FC drives . . . 99
SCSI drives . . . 100
SAS drives . . . 101
Control mode page . . . 102
Control Extension sub-page . . . 103
Data Compression Characteristics page . . . 103
Device Configuration page . . . 104
Medium Partitions mode page . . . 106
Protocol-Specific Logical Unit mode page *(FC drives)* . . . *107*
Protocol-Specific Logical Unit mode page *(SCSI drives)* . . . *108*
Protocol-Specific Logical Unit mode page *(SAS drives)* . . . *108*
Protocol-Specific Port mode page *(FC drives)* . . . *108*
Protocol-Specific Port mode page *(SCSI drives)* . . . *112*

Sub-pages *(SCSI drives)* *112*
Protocol-Specific Port mode page *(SAS drives)* *116*
PHY Control and Discover sub-page *(SAS drives only)* *117*
Power Condition mode page 119
Information Exceptions mode page 120
Medium Configuration mode page 121
Serial Number Override vendor-unique mode page 122
Device Time mode page 123
Extended Reset vendor-unique mode page 125
CD-ROM Emulation/Disaster Recovery mode page 126
MODE SENSE 1Ah/5Ah 128
PERSISTENT RESERVE IN 5Eh 130
PERSISTENT RESERVE OUT 5Fh 134
Additional parameter data 137
Parameter data for the Register and Move service action 137
Transport IDs 138
PREVENT/ALLOW MEDIUM REMOVAL 1Eh 140
READ 08h 141
READ 6 *(CD-ROM mode)* 08h 145
READ 10 *(CD-ROM mode)* 28h 146
READ ATTRIBUTE 8Ch 147
MAM attribute data 150
Attribute ID values 151
Standard device type attributes 151
Standard medium type attributes 153
Standard host type attributes 154
Vendor-unique medium type attributes 155
Text localization indentifiers 155
READ BLOCK LIMITS 05h 157
READ BUFFER 3Ch 158
READ CAPACITY *(CD-ROM mode)* 25h 161
Read Capacity data 161
READ LOGGED-IN HOST TABLE A3h (1Fh) 162
READ MEDIA SERIAL NUMBER . . . . . ABh (01h) 164
READ POSITION 34h 166
READ TOC *(CD-ROM mode)* 43h 169
Read TOC data 169
RECEIVE DIAGNOSTICS RESULTS 1Ch 171
RELEASE UNIT 17h/57h 173
REPORT DENSITY SUPPORT 44h 175
REPORT DEVICE IDENTIFIER A3h (05h) 179
REPORT LUNS A0h 180
REPORT SUPPORTED OPCODES A0h (0Ch) 182
REPORT SUPPORTED TASK MANAGEMENT FUNCTIONS
. . . . . A3h (0Dh) 184
REPORT TARGET PORT GROUPS A3h 186
Data returned 186

REQUEST SENSE 03h 189
Request Sense data 190
Fixed format. 190
Descriptor format 193
Sense data management 195
Current sense 195
UNIT ATTENTION sense 196
DEFERRED ERROR sense 197
Sense keys 198
Additional Sense codes 199
Error codes 206
RESERVE UNIT 16h/56h 207
REWIND 01h 209
Vendor-unique ENABLE TRANSPORT LAYER RETRIES *(SAS drives only)* C2h 210
SECURITY PROTOCOL IN A2h 211
Returned data. 211
SECURITY PROTOCOL OUT B5h 218
Returned data. 218
SEEK *(CD-ROM mode)* 2Bh 223
SEND DIAGNOSTIC 1Dh 224
Standard self-test 225
SET CAPACITY. 0Bh 226
SET DEVICE IDENTIFIER. A4h (06h) 228
SPACE 11h/91h 229
START/STOP *(CD-ROM mode)* 1Bh 232
TEST UNIT READY 00h 233
VERIFY 13h 234
WRITE 0Ah 235
WRITE ATTRIBUTE 8Dh 237
WRITE BUFFER 3Bh 240
WRITE FILEMARKS 10h 243

Glossary 245

Index 247

The purpose of this manual

This is one of five volumes that document HP LTO Ultrium drives. This volume provides host interface information for the following products:

- HP LTO Ultrium 4 Full-Height FC Internal Drive
- HP LTO Ultrium 4 Full-Height SCSI Internal Drive
- HP LTO Ultrium 4 Full-Height SAS Internal Drive

Related documents

The following documents provide additional information:

Documents specific to HP LTO Ultrium drives

- *Hardware Integration Guide*, volume 1 of the HP LTO Ultrium Technical Reference Manual
- *Software Integration Guide*, volume 2 of the HP LTO Ultrium Technical Reference Manual
- *Specifications*, volume 4 of the HP LTO Ultrium Technical Reference Manual
- *UNIX, Linux and OpenVMS Configuration Guide*, volume 5 of the HP LTO Ultrium Technical Reference Manual

Please contact your HP supplier for copies.

- The features and benefits of HP LTO Ultrium drives are discussed in the HP LTO Ultrium Technology White Paper.
- For a general background to LTO technology and licensing, go to http://www.lto-technology.com.

Documentation map

The following will help you locate information in the Technical Reference Manual. A reference like "1 HW Integration: *ch. 7*" means Volume 1, *Hardware Integration Guide*, of the HP LTO Ultrium Technical Reference Manual, chapter 7.

Drives—general

	FC Drives	SCSI Drives	SAS Drives
Connectors	1 HW Integration: *ch. 4*	1 HW Integration: *ch. 7*	
Front panel LEDs	1 HW Integration: *ch. 3*	1 HW Integration: *ch. 6*	
Specifications	4 Specifications		

Installation and configuration

	FC Drives	SCSI Drives	SAS Drives
Connectors	1 HW Integration: *ch. 4*	1 HW Integration: *ch. 7*	
Determining the configuration	2 SW Integration: *ch. 2*		
External drives	n/a	1 HW Integration: *ch. 5*	

	FC Drives	SCSI Drives	SAS Drives
In libraries	1 HW Integration: *ch. 1*		
In servers	n/a	1 HW Integration: *ch. 4*	
In tape arrays	n/a	1 HW Integration: *ch. 3*	n/a
Linux configuration	5 UNIX, Linux, OpenVMS Configuration		
Modes of usage	n/a	1 HW Integration: *ch. 8*	n/a
OpenVMS configuration	5 UNIX, Linux, OpenVMS Configuration		
Optimizing performance	n/a	1 HW Integration: *ch. 8*	n/a
	2 SW Integration: *ch. 4*		
UNIX configuration	5 UNIX, Linux, OpenVMS Configuration		

Operation

	FC Drives	SCSI Drives	SAS Drives
External drives	n/a	1 HW Integration: *ch. 5*	
In libraries	1 HW Integration: *ch. 1*		
In servers	n/a	1 HW Integration: *ch. 4*	
In tape arrays	n/a	1 HW Integration: *ch. 3*	n/a

Cartridges

	FC Drives	SCSI Drives	SAS Drives
Cartridge Memory (LTO-CM)	2 SW Integration: *ch. 5*		
Cartridges	1 HW Integration: *ch. 5*	1 HW Integration: *ch. 9*	
Managing the use of cartridges	2 SW Integration: *ch. 1*		
Use of cartridges	2 SW Integration: *ch. 3*		

Interface

	FC Drives	SCSI Drives	SAS Drives
FC, SCSI and SAS host interface guide	3 Host Interface		
Commands	3 Host Interface: *ch. 5*		
Error codes	1 HW Integration: *ch. 6*	1 HW Integration: *ch. 10*	
Implementation	3 Host Interface: *ch. 1*		
Interpreting sense data	2 SW Integration: *ch. 3*		
Messages	3 Host Interface: *ch. 2*		
Mode pages —see the MODE SENSE command	3 Host Interface: *ch. 5*		

	FC Drives	SCSI Drives	SAS Drives
Pre-execution checks	3 Host Interface: *ch. 4*		
Responding to sense keys and ASC/Q	2 SW Integration: *ch. 6*		
Sense keys and ASC/Q —see REQUEST SENSE command	3 Host Interface: *ch. 5*		
Task management functions	n/a	3 Host Interface: *ch. 3*	

Maintenance and troubleshooting

	FC Drives	SCSI Drives	SAS Drives
Cleaning	2 SW Integration: *ch. 5* 2 SW Integration: *ch. 7*		
External drives	n/a	1 HW Integration: *ch. 5*	
In libraries	1 HW Integration: *ch. 1*		
In servers	n/a	1 HW Integration: *ch. 4*	
In tape arrays)	n/a	1 HW Integration: *ch. 3*	n/a
Monitoring drive and tape condition	2 SW Integration: *ch. 7*		
Software troubleshooting techniques	2 SW Integration: *ch. 1*		

Dealing with errors

	FC Drives	SCSI Drives	SAS Drives
Error codes	1 HW Integration: *ch. 6*	1 HW Integration: *ch. 10*	
Handling errors	2 SW Integration: *ch. 5*		
Logs—see the LOG SENSE command	3 Host Interface: *ch. 4*		
Recovering from write and read errors	2 SW Integration: *ch. 7*		
Software response to error correction	2 SW Integration: *ch. 3*		
Software response to logs	2 SW Integration: *ch. 3*		
TapeAlert log	2 SW Integration: *ch. 7*		

LTO Ultrium features

	FC Drives	SCSI Drives	SAS Drives
Autoload	1 HW Integration: *ch. 2*		
Automation Control Interface (ACI)	1 HW Integration: *ch. 2*		
Cartridge Memory (LTO-CM)	1 HW Integration: *ch. 2* 2 SW Integration: *ch. 5*		
Data compression, managing	2 SW Integration: *ch. 5*		
OBDR and CD-ROM emulation	2 SW Integration: *ch. 7*		

	FC Drives	SCSI Drives	SAS Drives
Performance optimization	n/a	1 HW Integration: *ch. 8*	
	2 SW Integration: *ch. 1*		
Performance, factors affecting	2 SW Integration: *ch. 4*		
Software design	2 SW Integration: *ch. 1*		
Supporting LTO Ultrium features	2 SW Integration: *ch. 5*		

General documents and standardization

See http://www.t10.org/t10_main.htm for INCITS SCSI Primary Commands—3 (SPC-3), SCSI Streaming Commands (SSC-3) and other specifications

Copies of documents of other standards bodies can be obtained from:

INCITS	11 West 42nd Street New York, NY 10036-8002 USA	
ISO	CP 56 CH-1211 Geneva 20 Switzerland	
ECMA	114 Rue du Rhône CH-1204 Geneva Switzerland	Tel: +41 22 849 6000 Web URL: http://www.ecma.ch
Global Engineering Documents	2805 McGaw Irvine, CA 92714 USA	Tel: 800 854 7179 or 714 261 1455

1 Interface Implementation

HP LTO Ultrium drives use Fibre Channel, parallel SCSI or Serial Attached SCSI (SAS) as the interface to connect to the host system.

This chapter gives an overview of how the interface operates.
Full details of the messages are given in Chapter 2, of SAS response frames and task management functions in Chapter 3, and of commands in Chapter 4 and Chapter 5.

The Fibre Channel interface

Fibre Channel is an industry standard, approved by the American National Standards Institute (ANSI). You are recommended to read the ANSI standard documents in conjunction with this manual. The ANSI specifications define the interface in general while this document describes the HP LTO Ultrium implementation.

The Fibre Channel implementation provides a drive with a standard set of features and functions. These include the following:

- Implementation of all mandatory and most optional commands of the Sequential Access command set
- 4 Gbps serial transfers with auto-negotiation to 2 Gbps and 1 Gbps speeds
- Dual port capability
- Conformance to the following SCSI standards:
  - FC-PI ANSI INCITS 352-2002
  - FC-FS ANSI INCITS 373-2003
  - FC-FLA ANSI INCITS TR-20-1998
  - FC-AL-2 ANSI INCITS 332-1999
  - FCP-2 ANSI INCITS 350-2003
  - FC-TAPE ANSI INCITS TR-24-1999
- In addition to the standards listed above the following generic SCSI standards apply.
  - SAM-2 ANSI INCITS 366-2003
  - SPI-4 ANSI INCITS 362-2002
  - SPC-3 ANSI INCITS 408-2005
  - SSC-2 ANSI INCITS 380-2003

Supported task management functions

The following task management functions are supported by the drives:

- ABORT TASK
- ABORT TASK SET
- CLEAR TASK SET
- LOGICAL UNIT RESET
- QUERY TASK

For implementation details on these, see Chapter 3, "Response frames and task management functions".

The SCSI interface

The Small Computer System Interface (SCSI) is an industry standard, approved by the American National Standards Institute (ANSI). You are recommended to read the ANSI standard document in conjunction with this manual. The ANSI specification defines the interface in general while this document describes the HP LTO Ultrium implementation.

The SCSI implementation provides a drive with a standard set of features and functions. These include the following:

- Synchronous data transfers
- Asynchronous data transfers
- Implementation of all mandatory and most optional commands of the Sequential Access command set
- LVD (Low-Voltage differential) SCSI connection
- Ultra-320 wide SCSI
- Conformance to the following SCSI standards:
  - SAM-2 ANSI INCITS 366-2003
  - SPI-4 ANSI INCITS 362-2002
  - SPC-3 ANSI INCITS 408-2005
  - SSC-2 ANSI INCITS 380-2003

Supported messages

The following messages are supported by the drives:

- ABORT
- BUS DEVICE RESET
- COMMAND COMPLETE
- DISCONNECT
- IDENTIFY
- IGNORE WIDE RESIDUE
- INITIATOR DETECTED ERROR
- MESSAGE PARITY ERROR
- MESSAGE REJECT
- NO-OP *(no operation)*
- PARALLEL PROTOCOL REQUEST (PPR)
- RESTORE POINTERS
- SAVE DATA POINTER
- *Extended Message:* PARALLEL PROTOCOL REQUEST
- SYNCHRONOUS DATA TRANSFER REQUEST
- WIDE DATA TRANSFER REQUEST

For implementation details on these messages, see Chapter 2, "Messages"

The SAS interface

Serial Attached SCSI (SAS) is an industry standard, approved by the American National Standards Institute (ANSI). You are recommended to read the ANSI standard documents in conjunction with this manual. The ANSI specifications defines the interface in general while this document describes the HP LTO Ultrium implementation.

The SAS implementation provides a drive with a standard set of features and functions. These include the following:

- Implementation of all mandatory and most optional commands of the Sequential Access command set
- SAS1.1 compliant interface
- 3 Gbps serial transfers
- Dual port capability
- Conformance to the following SCSI standards:
  - SAM-2 ANSI INCITS 366-2003
  - SAS1.1 T10/1601-D revision 10
  - SPC-3 ANSI INCITS 408-2005
  - SSC-2 ANSI INCITS 380-2003

Supported task management functions

The following task management functions are supported by the drives:

- ABORT TASK
- ABORT TASK SET
- CLEAR TASK SET
- LOGICAL UNIT RESET
- QUERY TASK

For implementation details on these, see Chapter 3, "Response frames and task management functions"

Supported commands

The following commands are supported by the drives. They include all Mandatory and Extended commands and most Optional commands.

A4h (1Fh)	Enh. FW UPGRADE DOWNLOAD FW SEGMENT	**1Ch**	RECEIVE DIAGNOSTIC RESULTS
A4h (1Fh)	Enh. FW UPGRADE REBOOT	**57h/17h**	RELEASE UNIT
A3h (1Fh)	Enh. FW UPGRADE REPORT IMAGE INFO	**03h**	REQUEST SENSE
C2h	ENABLE TLRS *(SAS drives only)*	**44h**	REPORT DENSITY SUPPORT
19h	ERASE	**A3h (05h)**	REPORT DEVICE IDENTIFIER
12h	INQUIRY	**A0h**	REPORT LUNS

1Bh	LOAD/UNLOAD	**A3h (0Ch)**	REPORT TARGET PORT GROUPS
2Bh/92h	LOCATE (10/16)	**A3h (0Ch)**	REPORT SUPPORTED OP CODES
4Ch	LOG SELECT	**A3h (0Dh)**	REPORT SUPPORTED TASK MNGMNT FUNCTNS
4Dh	LOG SENSE	**56h/16h**	RESERVE UNIT
15h/55h	MODE SELECT	**01h**	REWIND
1Ah/5Ah	MODE SENSE	**A2h**	SECURITY PROTOCOL IN
5Eh	PERSISTENT RESERVE IN	**B5h**	SECURITY PROTOCOL OUT
5Fh	PERSISTENT RESERVE OUT	**2Bh**	SEEK *(CD-ROM mode)*
1Eh	PREVENT/ALLOW MEDIUM REMOVAL	**1Dh**	SEND DIAGNOSTIC
08h	READ	**0Bh**	SET CAPACITY
08h	READ 6 *(CD-ROM mode)*	**A4h (06h)**	SET DEVICE IDENTIFIER
28h	READ 10 *(CD-ROM mode)*	**11h**	SPACE (6)
8Ch	READ ATTRIBUTE	**91h**	SPACE (16)
05h	READ BLOCK LIMITS	**1Bh**	START/STOP UNIT *(CD-ROM mode)*
3Ch	READ BUFFER	**00h**	TEST UNIT READY
25h	READ CAPACITY *(CD-ROM mode)*	**13h**	VERIFY
A3h (1Fh)	READ LOGGED-IN HOST TABLE *(FC and SAS only)*	**0Ah**	WRITE
ABh (01h)	READ MEDIA SERIAL NUMBER	**8Dh**	WRITE ATTRIBUTE
34h	READ POSITION	**3Bh**	WRITE BUFFER
43h	READ TOC *(CD-ROM mode)*	**10h**	WRITE FILEMARKS

For implementation details on these commands, see Chapter 4, "Commands—introduction" and Chapter 5, "Commands".

SCSI features

Design approach

The features supported by the drive are based on standards, both official and de facto. The drive is fully compliant with the current SCSI standards: SPC3, SSC2, SAM2, and the relevant transport protocol (such as SPI4 for SCSI drives, SAS1.1 for SAS drives). All mandatory commands and features are supported, as well as some that are optional. In addition, some features from older standards are still supported for backwards compatibility.

Power-on

The drive will respond to INQUIRY, TEST UNIT READY, REPORT LUNS and REQUEST SENSE commands within 250 ms of power on for SCSI and SAS drives. For FC drives, the response time depends on whether the drive is standalone or operating within a library. Standalone could take up to 3 seconds, and if the drive is in a library, there would be an additional library initialization time on top of this.

The first command received from an initiator (other than INQUIRY, REQUEST SENSE and REPORT LUNS) will result in CHECK CONDITION status, with UNIT ATTENTION sense data reported for the power on. Once the drive has completed its self-test and set-up procedures, it will attempt to reload any tape that is already present in the drive. It may take some time to recover the tape, especially if it was positioned near EOM when power was cycled. During tape recovery, medium access commands will result in a sense key of NOT READY, with additional sense of 0401h (drive in process of becoming ready).

Reset strategy

The drive supports reset as follows:

- The current I/O process is aborted
- Any queued I/O processes from other initiators are removed
- *SCSI drives only:* All negotiated settings are cleared
- Mode parameters that do not relate to ADI and port enablement are cleared to their default values
- Any reservations are cleared (but not persistent reservations)
- Any buffered writes are flushed to tape
- The logical position becomes undefined, unless Rewind-On-Reset has been configured in which case the drive will rewind to BOM
- A UNIT ATTENTION condition is set, based on the type of reset

SCSI drives will respond to INQUIRY, TEST UNIT READY, REPORT LUNS and REQUEST SENSE within 250 ms of the reset line being released. The first command from any initiator (other than INQUIRY, REQUEST SENSE and REPORT LUNS) will result in CHECK CONDITION status with UNIT ATTENTION sense data for the reset.

NOTE: *SCSI drives:* All commands will receive BUSY status until the drive has completed its internal reset.

The Reset button on the front panel and the ACI_RESET_L line on the Automation Controller Interface are both connected to the Power-Up Reset interrupt on the processor. The effect is equivalent to power-cycling the drive. The contents of the tape and cartridge memory may not be consistent after the action and any data in the drive buffer will be lost.

Abort handling

SCSI drives

If an abort condition is detected before a command phase completes, the bus is set to bus free and the command is not executed.

If an abort condition is detected between the end of the command phase and the start of the status phase, the bus is set to bus free and the processing below is carried out as listed in Table 1.

If an abort condition is detected during status phase, the bus is set to bus free.

If a command (other than INQUIRY for standard data or REQUEST SENSE) is received after the abort but before the drive is ready to process the command, the behavior depends on whether Disconnects are allowed.

- If disconnects are allowed, the drive will disconnect and wait until the abort processing has completed before executing the command.
- For SCSI drives, if disconnects are not allowed, a BUSY response will be returned.

All interfaces

If an abort condition is detected, it will be processed as listed in Table 1.

Table 1 Abort processing

Command	Abort Processing
ERASE	Long erase is aborted as quickly as possible without corrupting the tape format. Short erase completes.
INQUIRY	None
LOAD/UNLOAD	Load completes and logically positions the tape at BOT. Unload is aborted leaving the logical position at BOT unless the operation is past the "point of no return" in which case the tape is ejected.
LOCATE	The logical position is set back to that at the start of the operation.
LOG SELECT	If data transfer is complete, the command is completed, otherwise no action is taken
LOG SENSE	None
MODE SELECT	If data transfer is complete, the command is completed, otherwise no action is taken.
MODE SENSE	None
PREVENT/ALLOW MEDIUM REMOVAL	The command completes.
READ	The logical position is set to that at the start of the operation.
READ BLOCK LIMITS	None
READ BUFFER	None
READ POSITION	None
RECEIVE DIAGNOSTICS RESULTS	None
RELEASE UNIT	The command completes.
REQUEST SENSE	Sense data is discarded.
RESERVE UNIT	The command completes.
REWIND	The command completes.
SEND DIAGNOSTIC	If data transfer is complete, the command is completed, otherwise no action is taken

Command	Abort Processing
SPACE	The logical position is set back to that at the start of the operation.
TEST UNIT READY	None
WRITE	The logical position is set back to that at the start of the operation.
WRITE BUFFER	If data transfer is complete, the command is completed, otherwise no action is taken.
WRITE FILEMARKS	The logical position is set back to that at the start of the operation
VERIFY	The logical position is set back to that at the start of the operation

LUN identification *(SCSI only)*

Identify messages are used to identify the LUN being addressed by the initiator, and to identify which LUN is reselecting the initiator. The old LUN field in the CDB from the SCSI-2 standards is obsolete and should not be used (set to 0).

Bus parity or CRC errors *(SCSI only)*

If the drive detects a bus parity error in a message out or command phase, it will still accept the command, which will then return CHECK CONDITION. Additional sense is 4700h (SCSI parity error). Detection of a parity error during the data out phase also causes the drive to return CHECK CONDITION. Additional sense is set to 4701h (data phase CRC error detected) if the bus is in DT mode or 4700h if not.

If Information Units is enabled (SCSI only), the drive will drop the bus on detecting a CRC error during a LQ_IU. If the CRC error occurs during the Information Units command phase or data out phase, the drive will return CHECK CONDITION with a CRC error. Additional sense is set to 4703h (Information Unit CRC error detected).

On detecting an Initiator Detected error, the drive will return CHECK CONDITION with additional sense of 4800h (initiator detected error message received). The exception is when Information Units mode is enabled (SCSI only), when one of the following occurs:

- If an IDE message is received during a LQ_IU, the drive drops the bus and retries the LQ_IU pair.
- If the message is received during Status IU, the drive retries the LQ_Status pair.
- If the message is received during Data IU, the drive sends a LQ_Status with CHECK CONDITION and additional sense of 4800h.

Disconnect strategy *(SCSI only)*

The disconnect strategy used by the drive is based on maximizing the use of the bus for large sequential data transfers from a large data buffer. The drive will disconnect whenever it believes that it will provide better bus use. This may be between command and data phases, between bursts of data or before sending status. However, the drive will guarantee that it sends the configured maximum burst size or the remaining data in the transfer in any single data phase burst if the maximum burst size has been set to a value other than zero.

The following diagram gives an overview of the drive's disconnect strategy:

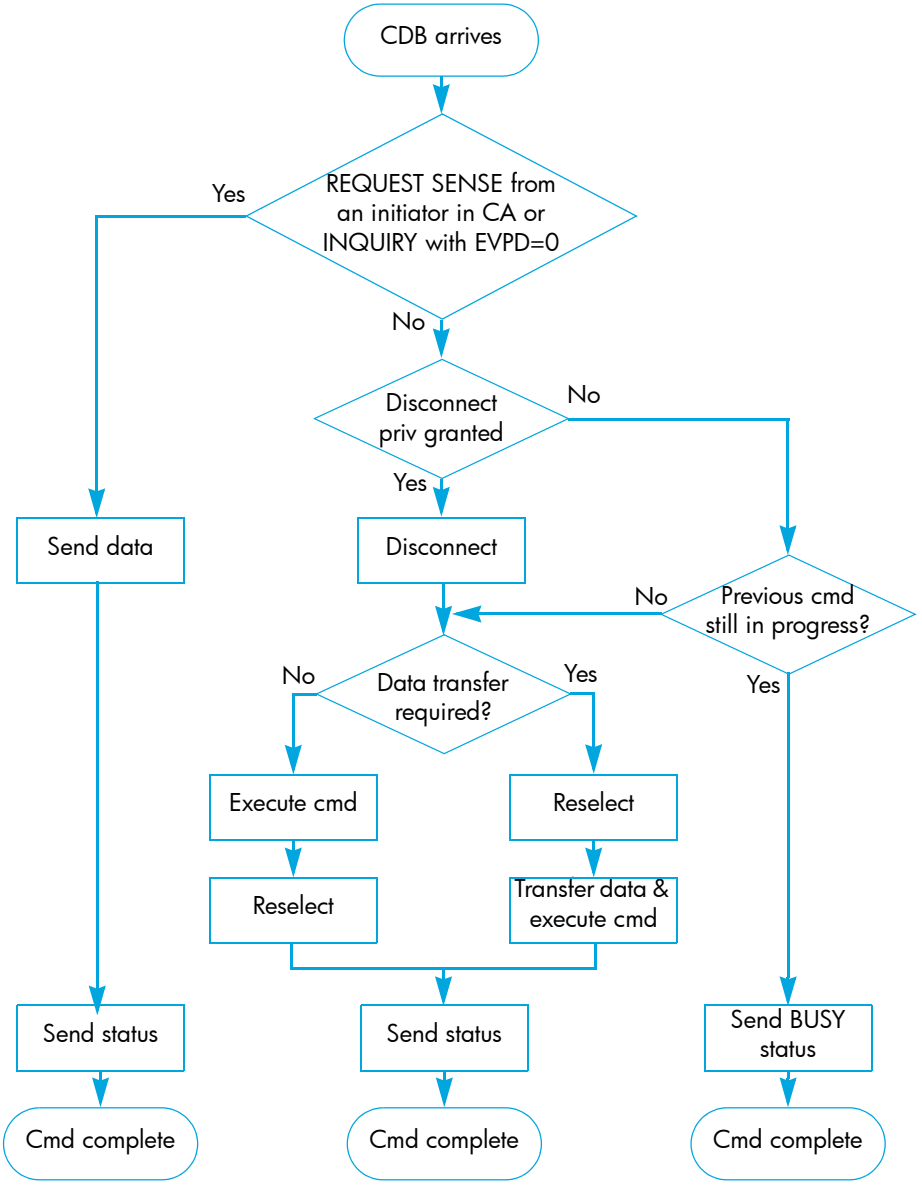

Link error handling *(SAS drives)*

In normal operation, random errors will occasionally be encountered on the link between the initiator and the tape drive. A single bit error may result in a frame with a bad CRC value, or in a communication failure if the error corrupts one of the special "primitive" messages used to manage the link. The SAS standard provides an optional mechanism to retry most link errors; this mechanism is known as Transport Layer Retries. See "Protocol-Specific Logical Unit mode page (SAS drives)" on

page 108. By default the tape drive has retries disabled; an initiator which is also capable of handling retries must enable them in the tape drive typically during the discovery phase.

The following table indicates the drive behavior both with and without transport layer retries enabled, for a variety of possible error scenarios:

Error Type	**Behavior**	
	Transport Layer Retries Disabled	**Transport Layer Retries Enabled**
Data frame CRC error on writes	The drive sends NAK. The initiator aborts the command using the ABORT task management functions.	The drive sends NAK. The initiator restarts data transfer with the Changing Data Ptr bit set for the first resent frame.
Data frame CRC error on reads	The initiator sends NAK. The drive aborts the command with a sense key of ABORTED COMMAND and additional sense of 4B04h (NAK received).	The initiator sends NAK, drive restarts transfer from start of burst with Changing Data Ptr bit set for 1st resent frame
XFER_RDY frame CRC error	The initiator sends NAK. The drive aborts the command with a sense key of ABORTED COMMAND and additional sense of 4B04h (NAK received).	The initiator sends NAK. The drive re-issues XFER_RDY with the Retransmit bit set and a fresh TPTT value.
Response frame CRC error	The initiator sends NAK. The drive re-sends the response frame with the Retransmit bit set	The initiator sends NAK. The drive re-sends the response frame with the Retransmit bit set.
Loss of ACK for a write data frame	The initiator times out the operation and sends an ABORT task management function.	The drive completes the operation (since all data was received successfully) and sends GOOD status.
Loss of ACK for read data frame	The drive times out the operation and aborts the command with a sense key of ABORTED COMMAND and additional sense of 4B03 (ACK/NAK Timeout).	The drive times out the operation, then restarts the transfer from the start of the burst with the Changing Data Ptr bit set for the first resent frame.

Error Type	Behavior	
	Transport Layer Retries Disabled	**Transport Layer Retries Enabled**
Loss of ACK for a XFER_RDY frame	The drive times out the operation and aborts the command with a sense key of ABORTED COMMAND and additional sense of 4B03 (ACK/NAK Timeout).	The drive times out the operation, then re-issues XFER_RDY with the Retransmit bit set and a fresh TPTT value.
Loss of ACK for a response frame	The drive times out the operation, then re-sends the response frame with the Retransmit bit set.	The drive times out the operation, then re-sends the response frame with the Retransmit bit set.

Multi-initiator support

All drives are design to operate within a multi-initiator environment. The maximum number of concurrently connected initiators is:

- *FC drives:* 255, shared across both ports
- *SCSI drives:* 15
- *SAS drives:* 32, shared across both ports

Sense Data, Unit Attention and Deferred Errors are maintained for each initiator. Mode Parameters are common to all initiators.

The untagged queuing model implemented by the drives guarantees that all commands are executed in strict order of receipt. Certain non-media access type commands, such as TEST UNIT READY, INQUIRY, REQUEST SENSE and REPORT LUNS, are implicitly allowed to queue-jump other media access type commands, such as REWIND.

The SCSI drive supports the full command queuing model with a queue depth of 1 (*SCSI drives*, necessary for connectivity purposes) or 4 (*FC drives*). See "Standard Inquiry Data format (LUN0)" on page 51 for details of the BQue and CmdQue bits which define this support.

Fibre Channel operation

The following sections have information specific to Fibre Channel operation:

- "Protocol-Specific Logical Unit mode page (FC drives)" on page 107
- "Protocol-Specific Port mode page (FC drives)" on page 108
- "Vital Product Data pages" on page 55

Fibre Channel addressing

Before describing HP's implementation of Fibre Channel addressing, the concepts of **Names** and **Addresses** need to be clarified.

Names

Names are 64-bit identifiers assigned permanently to the tape drive during manufacture. They are commonly referred to as World Wide Names since they must be guaranteed unique. The names are

typically used for identifying the device to operating systems, since addresses are assigned dynamically. One of the principal uses for WWNs in Storage Area Networks is to enable the division of fabrics into separate zones for security, load balancing, redundancy or manageability purposes.

There are at least eight different name formats distinguished by the Network Address Authority (NAA). Only one is used on HP LTO Ultrium drives. This is the IEEE Registered Name (NNA=5) and has the following format:

	31 *byte 0* 24	23 *byte 1* 16	15 *byte 2* 8	7 *byte 3* 0
word 1	NAA=5	IEEE Company ID (24 bits)		VSID
word 2	Vendor Specified ID (36 bits)			

This name is made up of three fields:

- NAA Identifier (4 bits). “5” indicates a IEEE Registered Name.
- IEEE Company ID (24 bits). Assigned by IEEE to the company.
- Vendor Specified ID (36 bits). Assigned by the company.

Addresses

Each Fibre Channel port also has a **Port Address** which is assigned during loop initialization and/or Fabric Login. This is a 24-bit value in the following format:

23 *byte 1* 16	15 *byte 2* 8	7 *byte 3* 0
Domain Addess	Area Addess	Port or AL_PA Addess

The AL_PA is the Arbitrated Loop Physical Address. This is normally assigned dynamically during loop initialization.

If the drive is on a loop that is not attached to a fabric (in other words, when it is on a private link), the top two bytes will be zero. If the loop is attached to a fabric, the top two bytes are assigned when it logs into the fabric.

Together, the three bytes provide a unique address on the Fibre Channel fabric that is used for frame addressing. It forms the equivalent of the Target ID or Initiator ID in SCSI.

HP’s implementation of names and addresses

The HP implementation uses three adjacent IEEE Registered Names:

- The first (last bits = 00) is used as the *Port A World Wide Name*.
- The second (last bits = 01) is used as the *Port B World Wide Name*.
- The third name (last bits = 10) is used for the *Device World Wide Name*.

(These are assigned during manufacture from HP's pool of names, although only the first will actually be stored in the drive NV-RAM).

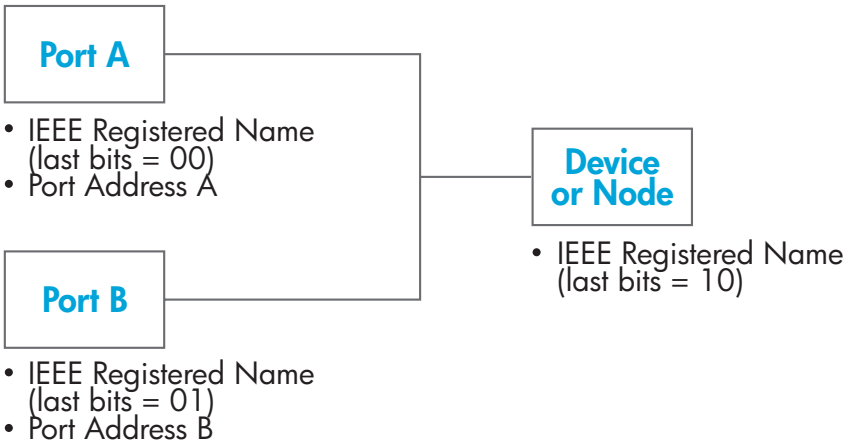

On LTO 4 drives there are two further WWNs, the *SCSI Device WWN* (typically set equal to the Node WWN) and the *ADC Device WWN* (last bits = 11)

The values of the names can be obtained using the Device Identification Vital Product Information Page (part of the INQUIRY command).

Implications for libraries

- Normally a standalone drive will operate using its own factory-programmed 'hard' names.
- The drive knows it is in a library or other 'managed' environment since one of the signal lines on the Automation Interface) will be tied down. In this guide, the term "Automation Interface" covers both ACI (Automation Control Interface) and ADI (Automation/Drive Interface).

  In this case, the drive will not go on the FC loop or connect to the fabric until it is told to. The library can optionally download new soft names (Port A, Port B and Node Name) into the drive at this point. The drive will then use this as the origin of its names. The library manufacturer would be responsible for obtaining this IEEE Registered Name. It would be a property of the library, *not* the drive.
- If the library wants to 'warm swap' drives, it can. It just 'turns off' the drive with the soft name using the ACI and then turns on the spare drive, downloading the same name to it.
- If a drive is removed from the library, it will not have the ACI signal tied low and so will revert to its original hard name. It should forget the soft name in this case.
- If the library controller breaks, the drive will time out the ACI interface in ~10 seconds. The drive still knows it is in a library since the ACI signal is still tied low, so in this case it will use the soft name last downloaded. This will allow drive access without confusing the host.

Field replaceable units

An FRU code identifies which part of the hardware is considered to have failed. These codes turn up in sense data byte 14 and as the sense code qualifier for sense codes 4400h (internal target failure) and 40*XX* (diagnostic failure).

Although there are no actual *Field* Replaceable Units on HP LTO Ultrium drives, the following sub-assemblies can be replaced at Repair Centres:

- Drive PCA
- Mechanism
- Head Assembly
- Front Panel

CD-ROM emulation *(SCSI and SAS drives only)*

The One Button Disaster Recovery (OBDR) functionality in HP LTO Ultrium drives enables them to emulate CD-ROM devices in specific circumstances (also known as being in "Disaster Recovery" mode). The drive can then act as a boot device for PCs that support booting off CD-ROM.

A CD-ROM capable drive can be switched into CD-ROM mode by powering on with the eject button held down. The drive then alters its behavior as follows:

- The front panel lights flash a "warbling" sequence.
- CD-ROM commands are executed (as opposed to tape drive mode when they would be rejected). Commands specific to CD-ROM mode are READ 10, READ TOC and READ CAPACITY. In the case of SCSI commands 08h (READ), 1Bh (LOAD/UNLOAD) and 2Bh (LOCATE), these are interpreted as CD-ROM commands 08h (READ 6), 1Bh (START/STOP) and 2Bh (SEEK) respectively.
- Writing is disabled.
- Normal INQUIRY data is modified to add a field indicating that the drive supports CD emulation and to switch the peripheral device type field to indicate a CD-ROM drive.
- The mode header and mode block descriptor are modified.
- A CD-Emulation mode page is added.
- Mode data changes to reflect CD-ROM medium type and block size.
- Status reporting by the media access check is altered.
- The drive's sense data when the media is not ready for access always indicates "loading".

If a tape is inserted while the drive is in CD-ROM mode, the drive assumes that it will contain an image of a CD offset 20 blocks into the tape. It reads the first 250 kilobytes of this image into buffer space reserved for CD-caching. It then looks for a special message ("`EL TORITO SPECIFICATION`") at the 8th byte of the 18th record of the image. If the drive fails to find this message, it ejects the tape and waits in CD-ROM mode for a properly-written CD-image tape to be inserted.

The drive will remain in CD-emulation mode until one of the following occurs:

- A MODE SELECT command switches it back to tape drive mode using the CD-emulation mode page.
- *SCSI drives only:* A SCSI bus reset occurs following the reading of at least 100 blocks of CD-ROM data by a host.
- *SAS drives only:* A Logical Unit Reset task management function or a HARD_RESET primitive sequence is received, following the reading of at least 100 blocks of CD-ROM data by a host.
- The user power-cycles the drive or resets it using the forced-eject mechanism.

NOTE: If the drive exits CD-ROM mode through either of the first two of these, the tape will remain at the last logical position when in CD-ROM mode.

2 Messages

Message Out support *(SCSI only)*

Name	Code	Support
Abort	06h	An abort condition is generated (see "Abort handling" on page 17).
Bus Device Reset	0Ch	A reset condition is generated (see "Reset strategy" on page 17).
Extended Message	01h	See "Extended Message Support" below.
Identify	80h+	The Identify Out message is sent by the initiator to identify the Logical Unit to be accessed and to set Disconnect Privilege.
Initiator Detected Error	05h	The initiator has detected an error in the data being sent in a Command, Data or Status phase. The drive will send a restore data pointers message to retry the data transfer. (See "Message In support (SCSI only)" below for details). If the message is received immediately after an Identify message or after the Command Complete message has been sent, the drive will go Bus Free.
Message Parity Error	09h	The initiator has detected a parity error in a message. The drive will retry the message. (See "Message In support (SCSI only)" below for details). If the message is received immediately after an Identify message or after the Command Complete message has been sent, the drive will go Bus Free.
Message Reject	07h	This message is sent when the initiator does not support a message sent by the drive or that the message is inappropriate. If the message being rejected is Disconnect, Synchronous Data Transfer Request or Wide Data Transfer Request, the operation continues without those features. For all other messages, the message is treated as an Abort message. If the message is received during a Command, Data or Status phase, immediately after an Identify message or after the Command Complete message has been sent, the drive will go Bus Free.
No Operation	08h	This message has no effect and is ignored.

Message In support *(SCSI only)*

Name	Code	Support
Command Complete	00h	This message is sent by the drive at the end of the status phase to indicate that a command is complete. Once the message is sent, the drive releases the bus and goes to Bus Free.
Disconnect	04h	This message is sent by the drive to indicate that it is about to disconnect from the bus and go to Bus Free. During a Data phase, it is always pre-ceded by a Save Data Pointers message. If a Message Reject message is received in response to this message, then the disconnect is prevented.
Extended Message	01h	See "Extended Message Support" below.
Identify	8*X*h	The Identify In message is sent to the initiator during reconnect to indicate which Logical Unit is reconnecting.
Ignore Wide Residue	23h	This message is sent by the drive to the host to indicate that a byte on a wide bus is not valid. This is supported whenever a wide transfer is active. It should be sent at the end of the data phase. The standard action of the drive is to send this message between the data phase and the status phase with no disconnect.
Message Reject	07h	This message is sent to the initiator when the message received by the drive is unsupported or inappropriate.
Restore Pointers	03h	This message causes the initiator to reset its data transfer pointers to the values they held when the last save data pointers message was sent. It will be sent when a parity error is detected on the bus or when an Initiator Detected Error message is received in order to retry the data phase.
Save Data Pointers	02h	This message instructs the initiator to save its current data transfer pointers for use with a subsequent Restore pointers message. This message will always be sent before a Disconnect message during data phases.

Extended Message support *(SCSI only)*

Name	Code	Support
Synchronous Data Transfer Request	01h	The drive can initiate a Synchronous data transfer negotiation. If the message is received after selection and before the command phase, it will then go to message-in phase and respond with a valid response to complete the negotiation.
Wide Data Transfer	03h	The drive can initiate a Wide data transfer negotiation. If the message is received after selection and before the command phase, it will then go to message-in phase and respond with a valid response to complete the negotiation. Note that SDTR negotiated parameters will become asynchronous after a WDTR.
Parallel Protocol Request	04h	The drive will never initiate a Parallel Protocol Request transfer negotiation but will expect the initiator to do so. If the message is received after selection and before the command phase, it will then go to message-in phase and respond with a valid response to complete the negotiation.

Synchronous Data Transfer Request

	7	6	5	4	3	2	1	0
0	Extended Message (01h)							
1	Extended Message Length (03h)							
2	SDTR (01h)							
3	Transfer Period Factor							
4	Req/Ack Offset							

Wide Data Transfer Request

	7	6	5	4	3	2	1	0
0	Extended Message (01h)							
1	Extended Message Length (02h)							
2	WDTR (01h)							
3	Transfer Width Exponent							

Parallel Protocol Request

	7	6	5	4	3	2	1	0
0	Extended Message (01h)							
1	Extended Message Length (06h)							
2	Parallel Protocol Request (04h)							
3	Transfer Period Factor							
4	Reserved (0)							
5	Req/Ack Offset							
6	Transfer Width Exponent							
7	PComp_En	RTI	Rd_Strm	WR_Flow	Hold_MCS	QAS_Req	DT_Req	IU_Req

Fields

Transfer Period Factor	08h	Transfer period of 6.25 ns, Paced Information Unit transfers
	09h	Transfer period of 12.5 ns (FAST-80). Only valid when DT transfers have been requested
	0Ch	Transfer period of 50 ns (FAST-20) — LVD/SE drives only
	19h	Transfer period of 100 ns (FAST-10)
	32h	Transfer period of 200 ns (FAST-5)
Req/Ack Offset	This has a maximum value of 255.	
Transfer Width Exponent	For ST transfers, this can be either 0 (Narrow) or 1 (Wide). For DT transfers, it must be set to 1.	
PComp_En	Precompensation enable bit. Supported.	
RTI	Retain Training Information bit. Supported.	
Rd_Strm	0	Read streaming and read flow control enable bit. Not supported, so the drive will always return zero.
Wr_Flow	0	Write flow control enable bit. Not supported; the drive will always return zero.
Hold_MCS	0	Hold Margin Control Settings bit. Not supported; the drive will always return zero.
QAS_Req	0	QAS enable request bit. Not supported; the drive will always return zero.
DT_Req	This bit determines whether DT mode has been requested, in other words, packetized data transfers. Supported.	
IU-Req	Information units enabled request bit. Supported.	

Status

A Status byte is sent from the drive to the host during the Status phase at the end of each command as specified in the SCSI specification, unless the command has been cleared by an ABORT message, by a BUS DEVICE RESET message, or by a hard reset.

The Status bytes that the drive returns are as follows:

00h	**GOOD:** The drive has successfully completed the command.
02h	**CHECK CONDITION:** Any error, exception, or abnormal condition that causes sense data to be set returns CHECK CONDITION. The REQUEST SENSE command should be sent following this status to determine the nature of the error.
04h	**CONDITION MET:** Never returned by an HP LTO Ultrium tape drive.
08h	**BUSY**: The drive is unable to execute the command at this time. Try again later. The drive tries to avoid using this status code during normal operation. It can sometimes be used after commands have been aborted, during power-on and if there are multiple selecting initiators.
10h	**INTERMEDIATE:** Never returned by an HP LTO Ultrium tape drive.
14h	**INTERMEDIATE CND:** Never returned by an HP LTO Ultrium tape drive.
18h	**RESERVATION CONFLICT**: The drive is reserved by another party. See the Reservation check.
22h	**COMAND TERMINATED:** Never returned by an HP LTO Ultrium tape drive.
28h	**QUEUE FULL**
40h	**ABORTED COMMAND**

3 Response frames and task management functions

Response frames

This section describes the format of SAS response frames returned by HP LTO Ultrium tape drives. Response frames provide a way for the drive to report the outcome of all SCSI commands and task management functions:

	7	6	5	4	3	2	1	0
0–9	Reserved (0)							
10	Reserved (0)						DATAPRES	
11	Status							
12–15	Reserved (0)							
16	(MSB)	Sense Data Length (*n* bytes)						
19								(LSB)
20	(MSB)	Response Data Length (*m* bytes)						
23								(LSB)
24	Response Data (if any)							
23+*m*								
24+*m*	Sense Data (if any)							
23+*m*+*n*								

DATAPRES	Specifies the format and content of the Status, Sense Data Length, Response Data Length, Response Data, and Sense Data fields:		
	Code	**Name**	**Description**
	00b	NO_DATA	Neither response data nor sense data are present
	01b	RESPONSE_DATA	Response data is present
	10b	SENSE_DATA	Sense data is present
	11b	Reserved	
Status	The Status byte is valid for all response frames, unless the DATAPRES field is set to RESPONSE_DATA. It indicates the outcome of the SCSI command:		
	00h	GOOD	The drive has successfully completed the command.
	02h	CHECK CONDITION	Any error, exception, or abnormal condition that causes sense data to be set returns CHECK CONDITION. The REQUEST SENSE command should be sent following this status to determine the nature of the error.
	04h	CONDITION MET	Never returned by an HP LTO Ultrium tape drive.

	08h	BUSY	The drive is unable to execute the command at this time. Try again later. The drive tries to avoid using this status code during normal operation. It can sometimes be used after commands have been aborted, during power-on and if there are multiple selecting initiators.
	10h	INTERMEDIATE	Never returned by an HP LTO Ultrium tape drive.
	14h	INTERMEDIATE CND	Never returned by an HP LTO Ultrium tape drive.
	18h	RESERVATION CONFLICT	The drive is reserved by another party. See the Reservation check.
	22h	COMMAND TERMINATED	Never returned by an HP LTO Ultrium tape drive.
	28h	TASK SET FULL	The drive cannot accept another task at the moment because the internal limit has been reached. Try again later.
	30h	ACA ACTIVE	Typically not returned by an HP LTO Ultrium drive but may be in some circumstances; for example, on a Fibre Channel drive, if Host A sends Logical Unit Reset then Task Aborted would be sent to an outstanding Rewind on Host B.
	40h	TASK ABORTED	Never returned by an HP LTO Ultrium tape drive.
Response Data	If the DATAPRES field is set to RESPONSE_DATA, the Status and Sense Data fields are not valid; the drive is reporting a response to a task management function or to an invalid request as indicated by the response code:		
	Code	**Description**	
	00h	Task management function complete[a]	
	02h	Invalid frame	
	04h	Task managements function not supported[a]	
	05h	Task management function failed[a]	
	08h	Task management function succeeded[a]	
	09h	Incorrect Logical Unit Number[a]	
	0Ah	Overlapped tag attempted[b]	
	All other codes are reserved. [a] Only valid when responding to a TASK frame. [b] Returned when a command/task management function or task management function/task management function tag conflicts.		

Task management functions

This section includes all SCSI task management functions, both supported and unsupported.

Task Management functions provide an initiator and a target in the SAS domain with a means of managing specific operations or tasks. The supported functions are listed in this chapter.

In the following table, all the supported task management functions use the Logical Unit Number field, and ABORT TASK (01h) and QUERY TASK (80h) also use the Tag of Task to Be Managed field.

Code	Task Management Function	Description
01h	ABORT TASK	Performs the ABORT TASK task management function with: L = Logical Unit Number field Q = Tag of Task to Be Managed field
02h	ABORT TASK SET	Performs the ABORT TASK SET task management function with: L = Logical Unit Number field
04h	CLEAR TASK SET	Performs the CLEAR TASK SET task management function with: L = Logical Unit Number field
08h	LOGICAL UNIT RESET	Performs the LOGICAL UNIT RESET task management function with: L = Logical Unit Number field
20h	Reserved	
40h	CLEAR ACA	*Not supported*
80h	QUERY TASK	Performs the QUERY TASK task management function with: L = Logical Unit Number field Q = Tag of Task to Be Managed field
others	Reserved	

4 Commands—introduction

This chapter contains notes relating to the SCSI commands listed in Chapter 5.

Summary

The following table is a summary of the SCSI commands for sequential access devices, showing the operation code:

Opcode	Command Name
00h	TEST UNIT READY
01h	REWIND
03h	REQUEST SENSE
05h	READ BLOCK LIMITS
08h	READ
08h	READ 6 *(CD-ROM)*
0Ah	WRITE
0Bh	SET CAPACITY
10h	WRITE FILEMARKS
11h	SPACE
12h	INQUIRY
13h	VERIFY
15h	MODE SELECT
16h	RESERVE UNIT
17h	RELEASE UNIT
19h	ERASE
1Ah	MODE SENSE
1Bh	LOAD/UNLOAD
1Bh	START/STOP UNIT *(CD-ROM)*
1Ch	RECEIVE DIAG RESULTS
1Dh	SEND DIAGNOSTIC
1Eh	PREVENT MEDIUM REMOVAL
25h	READ CAPACITY *(CD-ROM)*
28h	READ 10 *(CD-ROM)*
2Bh	LOCATE
2Bh	SEEK *(CD-ROM)*
34h	READ POSITION
3Bh	WRITE BUFFER

Opcode	Command Name
3Ch	READ BUFFER
43h	READ TOC *(CD-ROM)*
44h	REPORT DENSITY SUPPORT
4Ch	LOG SELECT
4Dh	LOG SENSE
55h	MODE SELECT (10)
56h	RESERVE UNIT (10)
57h	RELEASE UNIT (10)
5Ah	MODE SENSE (10)
5Eh	PERSISTENT RESERVE IN
5Fh	PERSISTENT RESERVE OUT
8Ch	READ ATTRIBUTE
8Dh	WRITE ATTRIBUTE
A0h	REPORT LUNS
A2	SECURITY PROTOCOL IN
A3h (05h)	REPORT DEVICE IDENTIFIER
A3h (0Ah)	REPORT TARGET PORT GROUPS
A3h (0Ch)	REPORT SUPPORTED OPCODES
A3h (0Dh)	REPORT SUPPORTED TASK MGMNT FNS
A3h (1Fh)	READ LOGGED-IN HOST TABLE
A3h (1Fh)	Enh FW UPGRADE REPORT IMAGE INFO
A4h (06h)	SET DEVICE ID
A4h (1Fh)	Enh FW UPGRADE DOWNLOAD FW SEG
A4h (1Fh)	Enh FW UPGRADE REBOOT
ABh (01h)	READ MEDIA SERIAL NUMBER
B5h	SECURITY PROTOCOL OUT
C2h	*SAS-specific Vendor-Unique* ENABLE TLRS

Command details

The command descriptions in Chapter 5 are listed in alphabetical order of command name. Each command is described briefly. This is followed by a list of pre-execution checks which are described below. The Command Descriptor Block (CDB) is then given, with details of the various parameter bits and fields.

Pre-execution checks

NOTE: In compliance with the SCSI specification, the drive terminates a command with a CHECK CONDITION status and sets the sense key to ILLEGAL REQUEST when a reserved bit, byte, field or code is received which is not zero.

Before executing a command, the drive makes a number of checks. They fall into three categories:

- Checks on the command sent by the host. These ensure that no reserved or fixed fields have been set to illegal values. They check the syntax of commands, in other words the cross dependency of fields. For example, the Flag bit must not be set if the Link bit is not set.
- Checks to ensure that there are no outstanding UNIT ATTENTION or DEFERRED ERROR events posted for the host that has sent the command.
- Checks on media access abilities. These are performed for commands requiring access to the cartridge. A command is rejected if it attempts to access the cartridge when no cartridge is present or the cartridge is unloaded.

The checks are described below in alphabetical order. The usual order of execution is Illegal Field, Fixed Bit, Flag Link, Bad LUN, Reservation, Deferred Error, Unit Attention, Media Access, Media Write, Diagnostic Status, Humidity, Parameter List.

Bad LUN check

SAS drives only: For all commands except INQUIRY 12h, this checks that the LUN specified by the host is zero. The LUN is taken from the COMMAND frame that encapsulates the command descriptor block.

- If the LUN is unsupported, and the host command is not REQUEST SENSE, CHECK CONDITION is reported to the host with a sense key of ILLEGAL REQUEST, and additional sense of 2500h (logical unit not supported).
- If the LUN is unsupported, and the host command *is* REQUEST SENSE, the original sense data is replaced with a sense key of ILLEGAL REQUEST, and additional sense of 2500h (logical unit not supported). This new sense data is returned to the host. Once the command has completed successfully, the sense data is cleared.

Deferred Error check

A deferred error is generated when a command with immediate report fails after the report has been returned. The check looks to see if a deferred error exists for the host which sent the command, in other words, a deferred error for which CHECK CONDITION status has not yet been reported. If such an error exists, then the drive reports CHECK CONDITION. The sense data for the command is set to DEFERRED ERROR (which was generated when some previous command failed).

Note that if a UNIT ATTENTION condition and a DEFERRED ERROR condition both exist for an initiator, the DEFERRED ERROR condition will be reported first. This is because the operation leading to the deferred error must have been older than that leading to the unit attention. The drive reports the conditions in the order in which they arose.

Diagnostic Status check

This ensures that the drive is in a fit state to access the media. It does this by checking that there is no DIAGNOSTIC FAIL status within the drive.

If the drive has failed diagnostics, CHECK CONDITION is reported with a sense key of HARDWARE ERROR and additional sense of 400*X*h (diagnostic failure on component *X*).

Fixed Bit check

For the READ, VERIFY and WRITE commands, a Fixed bit set to 1 indicates that the length parameter of the command is for fixed block mode. If fixed block mode is selected then the block size in the Mode Select block descriptor must not be zero. Otherwise CHECK CONDITION is reported and the sense data is set as described for the ILLEGAL FIELD check.

Flag Link check

This check ensures that the host has not set the Flag bit in the control byte of the command without setting the Link bit as well. If the test fails then CHECK CONDITION is reported with a sense key of ILLEGAL REQUEST and additional sense of 2400h (invalid field in CDB). The Flag field is identified as the bad field.

Illegal Command check

If the drive does not recognize the opcode of the command that it has been sent, it will do one of the following:

- Report CHECK CONDITION status. The sense key will be set to ILLEGAL REQUEST and the additional sense code will be set to 2000h (invalid command opcode).
- Report an invalid field in the command descriptor block. The sense key will be set to ILLEGAL REQUEST, the additional sense code will be set to 2400h (invalid field in CDB) and the field pointer in the sense data will be zero.

Illegal Field/Request check

Checks are performed to ensure the host has not set any of the following in the command descriptor block:

- a fixed field
- a reserved field
- the control field
- two or more fields to logically conflicting values

If a field has been set to an illegal value:

- CHECK CONDITION status is reported to the host with a sense key of ILLEGAL REQUEST and additional sense of 2400h “invalid field in CDB”.
- The sense key specific bit is set and the sense key specific bytes will be a field pointer.
- The command/data bit is set, indicating that the illegal parameter was in the command.

NOTE: Command descriptor blocks are scanned from left (bit 7) to right (bit 0), and down (from byte 0 to byte *n*). The field pointer will be set to point to the first bit of the first illegal field encountered using this scanning route. In some cases, where multiple fixed fields are contiguous, the field pointer might be set to point to the first bit of the first fixed field in the group of fixed fields, whereas the actual illegality may lie in a later bit.

Media Access check

This checks if the drive is able to perform media access commands. If the media is inaccessible then CHECK CONDITION status is reported with a sense key of NOT READY. The additional sense will be set to one of the codes associated with the NOT READY key.

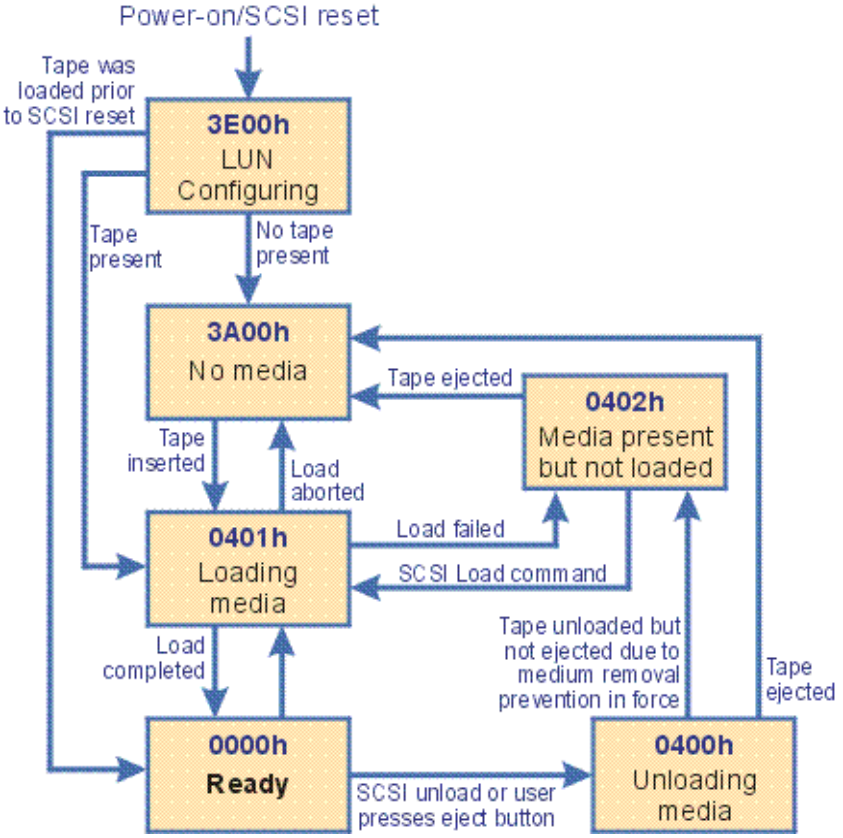

Media Information check

During power-on and following a SCSI reset, knowledge of the whereabouts of the cartridge is unavailable. It is not possible to execute commands which assume that this knowledge is available until the drive has recovered from the power-on or reset.

The test checks whether the drive knows if a cartridge is physically present in the drive.

If information about the tape cartridge is not available, the test fails with CHECK CONDITION, a sense key of NOT READY, and additional sense of 3E00 (logical unit has not self-configured yet).

Media Write check

This checks whether the media is write-protected. If it is, CHECK CONDITION is reported with a sense key of DATA PROTECT and additional sense of 2700h (write-protected).

Parameter List check

For LOG SELECT, MODE SELECT and some diagnostic commands, the associated data sent to the drive is in the form of parameter lists. These are described under the command names in the next chapter. Checks are performed to test the following:

- Fixed and reserved fields have not been modified. Fixed fields are indicated by a number in round brackets following the field name.
- A field has been set to an invalid value.
- The syntax of the page of parameters has been violated—for example, where a particular value in one field imposes limitations on the valid range for another field.

If a field has been set to an illegal value, CHECK CONDITION is reported to the host with a sense key of ILLEGAL REQUEST and additional sense of 2600h (invalid field in parameter list).

The drive scans the data in the Command Description Block from "left" (bit 7) to "right", and "down" (from byte 0 to byte *n*). It sets the field pointers to the first bit of the first bad field encountered. If the bad field is contained in a contiguous group of fixed fields, the pointers indicate the first bit of the first field in the group, even though the error may be in a later field in the group.

NOTE: With MODE SELECT, the drive checks the integrity of the whole parameter list before acting on any parameters, so all the mode parameters need to be correct before any of them are implemented.

Reservation check

This checks to see if the drive has been reserved for use by a host, and if it has, whether the host is the same host that sent the command being executed.

If the drive has been reserved for some other host then RESERVATION CONFLICT status is reported.

See the PERSISTENT RESERVE OUT (page 134), RELEASE UNIT (page 173) and RESERVE UNIT (page 207) commands.

Unit Attention check

This checks if a UNIT ATTENTION condition exists for the host which sent the command. If it does, the drive reports CHECK CONDITION status with a sense key of UNIT ATTENTION. The remaining sense data will be set according to the unit attention condition which exists. See Unit Attention Sense in the description of the REQUEST SENSE command on page 189.

Command descriptor block

A SCSI command descriptor block (CDB) is a sequence of 6, 10, 12 or 16 bytes sent by a host to a SCSI target with the bus in command phase. The CDB tells the drive what action should be performed. The final byte is known as the **Control byte**.

	7	6	5	4	3	2	1	0
0	Group Code			Operation Code				
1	Reserved (0)							
2	(MSB)	Multi-Byte Parameter						
***n*-1**								(LSB)
n	Vendor Unique (0)		Reserved (0)			NACA(0)	Flag (0)	Link (0)

There are a number of fields in a CDB which are common to *all* commands. These are shown in the following table.

Group Code *and* Operation Code	The operation code uniquely identifies the command. The top three bits of the operation code are known as the *group code* and these define the length of the command descriptor block:	
	Group 0	Six-byte commands
	Group 1	Ten-byte commands
	Group 2	Ten-byte commands
	Group 3	Six-byte commands
	Group 4	Sixteen-byte commands
	Group 5	Twelve-byte commands
	Group 6	Vendor-unique commands
	Group 7	not supported
Reserved	A reserved field should always be set to zero. The drive checks reserved fields, and if one is non-zero then it will reject the command with CHECK CONDITION.	
Multi-Byte Parameter	A multi-byte parameter field in a command is “big-endian”, that is, bit 7 of the first byte of this field is the most significant.	
Control	The control field is mainly concerned with the use of linked commands. These are not supported by the LTO SCSI Command Set, so a CHECK CONDITION will be generated if this field is set to anything other than zero.	
Vendor-Unique	This field is ignored by the firmware	
NACA	0	The Normal ACA flag is 0, indicating that it is not supported.
Flag	0	
Link	0	Linked commands are not supported.

5 Commands

This chapter describes all SCSI commands. Parts of the chapter are based on sections of the SCSI specification (see page 11).

For general notes on the command descriptions, see Chapter 4.

Enhanced FIRMWARE UPGRADE DOWNLOAD FIRMWARE SEGMENT A4h (1Fh)

Description

The Enhanced FIRMWARE UPGRADE DOWNLOAD FIRMWARE SEGMENT command allows the application client to download a firmware image, via an internal cache buffer, to the Secondary Image bank. No image should be considered written to the flash until this command, sent with LAST=1, returns GOOD status.

Pre-execution checks

Unit Attention Illegal Field Reservation Deferred Error

Command descriptor block

	7	6	5	4	3	2	1	0
0	Operation Code (A4h)							
1	Reserved (0)			Service Action (1Fh)				
2	HP LTO VU MI Opcode (05h)							
3	(MSB)	Segment Offset						
5								(LSB)
6	(MSB)	Segment Length						
8								(LSB)
9	Reserved (0)							
10	Reserved (0)							Last
11	Control							

CDB fields

Segment Offset	The offset within the bank at which this segment will be stored. The application client must set this to zero for the first download segment command. (It is possible to re-start the firmware download process many times by setting Segment Offset to zero). The field has the following restrictions: • It must be a multiple of 4 bytes. • It must reside within the bank size (1.91 MB).	
	0	The application client is starting a firmware download process.
Segment Length	The length in bytes allocated of the segment transferred.	

Last	0	The segment will be copied to the internal cache buffer at the specified offset.
	1	It is assumed that the last byte of the image is Segment Offset + Segment Length. Then the whole image is validated, and if correct, transferred from the cache buffer to flash. Status will not be returned until the firmware has been successfully written to the Secondary Image bank.

Enhanced FIRMWARE UPGRADE REBOOT A4h (1Fh)

Description

The Enhanced FIRMWARE UPGRADE REBOOT command causes the drive to reset and boot from the Primary Image bank. Status will be returned before reboot takes place. Before the reboot, all buffered write data is written to tape, and the tape is unloaded, or unthreaded depending on configuration settings.

Pre-execution checks

Unit Attention Illegal Field Reservation Deferred Error

Command descriptor block

	7	6	5	4	3	2	1	0
0	Operation Code (A4h)							
1	Reserved (0)			Service Action (1Fh)				
2	HP LTO VU MI Opcode (06h)							
3	Reserved (0)							Swap
4	Reserved (0)							
10								
11	Control							

CDB fields

Swap	0	The drive resets and reboots the currently running firmware, so the association of Primary and Secondary Images will remain unchanged. Enabled Automation Ports will be disabled, and the library controller needs to re-enable them.
Segment Length	1	The drive swap which banks are associated with the Primary and Secondary Images before resetting the drive. Use this to reboot the drive with the firmware most recently downloaded to the Secondary Image.
	Regardless of the value of the Swap field, the reboot command should not cause the drive to be offline for more than about 7 seconds.	

Enhanced FIRMWARE UPGRADE REPORT IMAGE INFO A3h (1Fh)

Description

The Enhanced FIRMWARE UPGRADE REPORT IMAGE INFO command returns a number of image descriptors to the application client up to the size specified in the Allocation Length field.

Pre-execution checks

Unit Attention Illegal Field Reservation Deferred Error

Command descriptor block

	7	6	5	4	3	2	1	0
0	Operation Code (A3h)							
1	Reserved (0)			Service Action (1Fh)				
2	HP LTO VU MI Opcode (05h)							
3	Reserved (0)							
5								
6	(MSB)	Allocation Length						
7								(LSB)
8	Reserved (0)							
10								
11	Control							

CDB fields

Allocation Length	The drive will return up to this number of bytes, truncating any parameter data as required.

Returned data

	7	6	5	4	3	2	1	0
0	Firmware Image Info Version							
1	Reserved (0)							
2	(MSB)	Firmware Image Info Length						
3								(LSB)
4	(MSB)	Firmware Image Descriptor 0						
47								(LSB)
48	(MSB)	Firmware Image Descriptor 1						
91								(LSB)

Firmware Image Info Version	The version of the following descriptors. Currently at version 1.
Firmware Image Info Length	The total length in bytes of the descriptors that follow. Version 1 descriptors are 28 bytes in length, for a dual bank drive this field will be 56.

Firmware image descriptor (version 1)

	7	6	5	4	3	2	1	0
0	Bank ID							
1	Reserved (0)			Status			Rsvd (0)	Primary
2	Reserved (0)							
3								
4	(MSB)	Publication Revision						
7								(LSB)
8	(MSB)	Firmware Revision						
15								(LSB)
16	(MSB)	Image Build Time						
19								(LSB)
20	(MSB)	Image Size						
23								(LSB)
24	(MSB)	Bank Size						
27								(LSB)

Status	000b	The image in good (no errors)
	001b–101b	Reserved
	011	The bank does not contain an image.
	100b–111b	Reserved
Primary	This field will be set if this is the Primary Image bank.	
Publication Revision	As reported in bytes 32–35 of the standard INQUIRY data.	
Firmware Revision	As reported in bytes 30–48 of VPD page C0h.	
Image Build Time	The time (UTC-based) at which this firmware image was built.	
Image Size	The size of the stored image in bytes	
Bank Size	The size of the bank in bytes	

ERASE 19h

The ERASE command is used to erase data on tape from the current logical position. The Long bit is used to decide whether the 'old' data is physically overwritten or not.
FC and SCSI drives only: ERASE commands (short or long) to a drive containing a WORM cartridge will not overwrite or erase user data on tape.

Pre-execution checks

Illegal Field	Reservation	Deferred Error	Unit Attention
Media Access	Media Write	Diagnostic Status	

Command descriptor block

	7	6	5	4	3	2	1	0
0	Operation Code (19h)							
1	Reserved (0)						Immed	Long
2–4	Reserved (0)							
5	Control							

CDB fields

Immed	0	The drive reports status after the command has completed.
	1	The drive reports status when it starts the command (after any pre-execution checks and prerequisite unloads have completed).
Long	The Long bit controls the distance to be erased.	
	0	The current position becomes the end of logical data.
	1	End of Data is written, followed by Data Set Separators to the end of the tape.

NOTE: Short erase is only used to truncate data at the current logical position. It cannot be used to create a "hole" in the tape into which data can subsequently be written "in place". This will merely cause the drive to streamfail. The logical tape position is unaffected by this command. A CHECK CONDITION for Early Warning EOM (drive error code 2C98h) will only be given if the tape is logically positioned past EOT immediately before the erase.

Erase specific status

Event	Status	Key	Additional Sense
The erase fails	CHECK CONDITION	HARDWARE ERROR	5100h (erase failure)
WORM media: Erase would result in user data being over-written.	CHECK CONDITION	DATA PROTECT	300Ch (WORM medium —overwrite attempted)

INQUIRY 12h

INQUIRY tells the drive to return information about the basic operating parameters to the host. These parameters cannot be changed. The drive returns Inquiry data to the host in a data-in phase.

NOTE: This command is immune from most of the pre-execution checks that other commands must pass (for example, it can be executed while the unit is reserved for another host). Unit attention and deferred error conditions are preserved and reported on subsequent commands.

Pre-execution checks

Only the Illegal Field Check is performed before the command is executed.

If the EVPD bit is clear, the page code must be zero, otherwise illegal request is reported.

If the EVPD bit is set, the page code must be one of the supported page codes for Inquiry data. Otherwise illegal request is reported.

Command descriptor block

	7	6	5	4	3	2	1	0
0	Operation Code (12h)							
1	LUN			Reserved (0)				EVPD
2	Page Code							
3	Allocation Length							
4								
5	Control							

CDB fields

LUN	This field is ignored.	
EVPD	*Enable Vital Product Data*	
	0	Normal inquiry data is returned.
	1	A page of vital product data is returned.

Page Code	If the EVPD bit is zero the Page Code field must be zero. If the EVPD bit is set to 1, the drive returns the Inquiry page in this Page Code field:	
	00h	Supported Vital Product Pages page
	80h	Unit Serial Number page
	83h	Device Identification page
	85h	Management Network Address page
	86h	Extended Inquiry Data page
	87h	Mode Page Policy page
	88h	SCSI Ports page
	B0h	Sequential Access Device Capabilities page
	B1h	Manufacturer-assigned Serial Number page
	B2h	TapeAlert Supported Flags page
	C0h	Firmware Revision Levels page
	C1h	Hardware Revision Levels page
	C2h	PCA Revision Levels page
	C3h	Mechanism Revision Levels page
	C4h	Head Assembly Revision Levels page
	C5h	ACI page
	CCh	HP Alternative Inquiry page *(variant specific)*
	D0h	HP Unique Inquiry page *(variant specific)*
Allocation Length	The maximum amount of data (in bytes) that should be returned. If more than this is available, the amount returned is truncated to allocation length. No error is reported.	

INQUIRY data pages

Returned data:

INQUIRY returns its standard data if the EVPD bit is zero, or returns a page of data as specified by the Page Code field when EVPD is one.

Standard Inquiry Data format (LUN0)

This is the data returned by the drive in response to an Inquiry command with its EVPD bit set to zero. The data also depends on the value of the LUN field in the Inquiry CDB, the LUN value in the identify message and the configuration of the drive.

Note that the data below is for the *standard distribution firmware*.

	7	6	5	4	3	2	1	0
0	Peripheral Qualifier (000b)			Peripheral Device Type (01h)				
1	RMB (1)	Reserved (0)						
2	Version Number (5)							
3	Obsolete		NACA(0)	HiSup(0)	Response Data Format (2)			

	7	6	5	4	3	2	1	0
4	Additional Length (5Bh)							
5	SCCS (0)	ACC (0)	TPGS (01b)		3PC (0)	Reserved (0)		Protect(0)
6	BQue(0)	EncSvr(0)	VS(0)	MultiP(0)	MChngr(0)	Obsolete		Adr16*
7	Obsolete		WBus16*	Sync*	Linked(0)	Obsolete	CmdQue(1)	VS(0)
8	(MSB)	Vendor Identification ("HP ")						
15								(LSB)
16	(MSB)	Product Identification						
31								(LSB)
32	(MSB)	Product Revision Level						
35								(LSB)
36 39	Reserved (0)							
40	WORM Version							WORM
41 42	Variant Specific							
43	(MSB)	OBDR string ("$DR-10") or Reserved (0) if not supported						
48								(LSB)
49 55	Reserved (0)							
56	Reserved (0)				Clocking		QAS (0)	IUS
57	Reserved (0)							
58	(MSB)	Version Descriptor 1						
59								(LSB)
- - - - - - - -								
72	(MSB)	Version Descriptor 8						
73								(LSB)
74 95	Reserved (0)							

* for FC and SAS drives, these fields are (0)

The Standard Inquiry Data is based on the SCSI 3 standard for Standard Inquiry Data.

For the LUN to which the drive is attached, the Peripheral Qualifier field is set to 000b, the Peripheral Device Type field is set to 01h, the Removable Medium (RMB) flag is set to 1 and the Device-type modifier is set to 0.

Inquiry Data fields

Peripheral Qualifier	000b 011b	There is a device on the logical unit selected, so the LUN field in the identify message was 0. The LUN field in the identify message has specified an unsupported logical unit. This means any LUN other than 0.
Peripheral Device Type	01h 05h 1Fh	Sequential Access Device CD Device (reported when in OBDR mode) No Device (the Peripheral Qualifier will be 011b in this case)
RMB	1	The Removable Medium bit is one, indicating that the tape can be removed.
Device-Type Modifier	0	This is a six-bit user defined code, set to zero.
Version Number	5	Indicating that the drive complies with the SPC-3 standard.
NACA	0	The Normal ACA flag is 0, indicating that it is not supported.
HiSup	0	The Hierarchical Support flag is 0, indicating that the hierarchical addressing model is not supported.
Response Data Format	2	The Inquiry Data format complies with the SCSI-3 standard.
Additional Length	The length in bytes of the length of the rest of the Inquiry data.	
	5Bh	There are 91 (5Bh) more bytes of Inquiry data.
SCCS	0	No storage array controller component is embedded in the drive.
ACC	0	No Access Controls Coordinator may be addressed through this LUN.
TPGS	01b	*Target Port Group Support.* Only implicit asymmetric logical unit access is supported.
3PC	0	Third-Party Copy commands are not supported.
Protect	0	Protection information is not supported.
BQue	Basic Queuing flag	
	0	The flag is zero for SCSI and SAS drives, with CmdQue = 1.
	1	The flag is 1 for Fibre Channel drives, with CmdQue = 0.
EncSvr	0	The drive does not support Enclosure Services command.
VS	0	Vendor-Specific field—not currently used
MultiP	1	The drives has multiple ports.
MChngr	0	The drive is not embedded within or attached to a medium transport element.
Adr16, WBus16, Sync	0	*FC and SAS drives:* These features are not applicable.
	1	*SCSI drives:* These features are supported.
Linked	0	The drive does not support linked commands.

CmdQue	0	*FC drives*: With BQue = 1
	1	*SCSI and SAS drives:* With BQue = 0. For SAS, the full queuing model is supported.
Vendor Identification	A vendor-specific, 8-byte string of ASCII characters, left justified and padded with space characters "`HP`".	
Product Identification	A left-justified, vendor-specific, 16-byte string field of ASCII characters with space character padding on the right. The string consists of two parts: • First half (bytes 16–23): "`Ultrium`" • Second half (bytes 24–31): "`<generation>-<interface type>`" The following string has been defined: *All LTO-4 drives:* "`Ultrium 4-SCSI`"	
Product Revision Level	A vendor-specific string of four ASCII characters: "`PdsV`": • `P` specifies the product (for LTO4 drives, "`H`" for FC, "`B`" for SCSI, "`A`" for SAS). • `d` denotes the major release level. • `s` is the minor release level. • `V` is a unique identifier for each variant of code.	
WORM Version	The version of WORM supported.	
WORM	1	The drive supports the LTO WORM specification.
OBDR string	"`$DR-10`" if the drive supports Tape Disaster Recovery.	
Clocking	0	*For FC and SAS drives.*
	3	*For SCSI drives*, indicating that the drive supports both ST and DT transfers.
QAS	0	The drive does not support Quick Arbitration and Selection.
IUS	Information Units	
	0	*FC and SAS drives:* Not applicable
	1	*SCSI drives:* Supported
Version Descriptor	These fields can be used to identify up to eight standards to which the drive conforms. The values supported are listed below.	

		Value	Standard
FC drives:	1	005Ch	SAM-2 ANSI INCITS.366:2003
	2	0917h	FCP-2 ANSI NCITS.332:1999
	3	0D7Dh	FC-AL-2 ANSI NCITS.350:200x with AM1:2002
	4	0DBCh	FC-FS ANSI NCITS.373:2003
	5	131Ch	FC-Tape ANSI NCITS TR-24:1999
	6	133Ch	FC-FLA ANSI NCITS TR-20:1998
	7	0314h	SPC-3 ANSI NCITS 408-2005
	8	037Dh	SSC2 ANSI NCITS.380:2003

SCSI drives:	1	005Ch	SAM2 ANSI INCITS.366.2003
	2	0B56h	SPI4 ANSI INCITS.362:2002
	3	0314h	SPC-3 ANSI NCITS 408-2005
	4	037Dh	SSC2 ANSI INCITS.380:2003
	5–8	0000h	not used
SAS drives:	1	005Ch	SAM2 ANSI INCITS.366.2003
	2	0C0Fh	SAS1.1 T10/1601-D revision 10
	3	0314h	SPC-3 ANSI NCITS 408-2005
	4	037Dh	SSC2 ANSI INCITS
	5–8	0000h	not used

Vendor Specific data may be sent after the Product Revision Level.

Vital Product Data pages

The following tables describe the vital product data pages. These pages are returned by the INQUIRY command when the EVPD bit is set and the appropriate Page Code is set in the Command Descriptor Block. They contain vendor-specific product information.

Supported Vital Product Data Pages page

This is the data returned by the drive in response to an Inquiry command with its EVPD bit set to one and its Page Code field set to 0.

This page contains a list of all the VPD page-codes supported by the drive.

	7	6	5	4	3	2	1	0
0	Peripheral Qualifier (0)			Peripheral Device Type (1)				
1	Page Code (00h)							
2	Reserved (0)							
3	Page Length (*XX*h)							
4	Supported Pages Code (00h)							
5	Unit Serial Number page (80h)							
6	Device Identification page(83h)							
7	Management Network Address page (85h)							
8	Extended Inquiry Data page (86h)							
9	Mode Page Policy page(87h)							
10	SCSI Ports page (88h)							
11	Sequential Access Device Capabilities page (B0h)							
12	Manufacturer-assigned Serial Number page (B1h)							
13	TapeAlert Supported Flags page (B2h)							
14	Firmware Revision Levels page (C0h)							
15	Hardware Revision Levels page (C1h)							

	7	6	5	4	3	2	1	0
16	PCA Revision Levels page (C2h)							
17	Mechanism Revision Levels page (C3h)							
18	Head Assembly Revision Levels page (C4h)							
19	Auto-Changer Interface Revision Levels page (C5h)							

Unit Serial Number page

The Unit Serial Number page contains a single value which is a 10-byte ASCII string. The string, with the Vendor Identification and Product Identification fields in the standard Inquiry data, uniquely identifies the drive.

	7	6	5	4	3	2	1	0
0	Peripheral Qualifier (0)			Peripheral Device Type (1)				
1	Page Code (80h)							
2	Reserved (0)							
3	Page Length (0Ah)							
4	(MSB)	Serial Number						
13								(LSB)

Device Identification page

The Device Identification page contains information that identifies the tape drive uniquely.

	7	6	5	4	3	2	1	0
0	Peripheral Qualifier (0)			Peripheral Device Type (1)				
1	Page Code (83h)							
2	Reserved (0)							
3	Page Length (*n*–3)							
4	(MSB)	Identification Descriptors						
n								(LSB)

Identification Descriptors are constructed as follows:

	7	6	5	4	3	2	1	0
0	Protocol Identifier				Code Set			
1	PIV	Rsvd (0)	Association		Identifier Type			
2	Reserved (0)							
3	Identifier Length (*n*–3)							

	7	6	5	4	3	2	1	0
4	(MSB)			Identifier				
n								(LSB)

Protocol Identifier	0h	Fibre Channel
	1h	Parallel SCSI
	6h	Serial Attached SCSI (SAS)
Code Set	1	The Identification Descriptor is a binary field.
	2	The Identification Descriptor contains only ASCII data.
PIV	1	The Protocol Identifier field is valid. This is set for an Association value of 1 or 2.
Association	0	The Identifier field is associated with the addressed logical unit.
	1	The Identifier field is associated with the port that received the request.
	2	The Identifier field is associated with the SCSI target device that contains the addressed logical unit.
	3	Reserved
Identifier Type	1	Vendor ID followed by the product identification field from the standard inquiry data and the serial number field from the Serial Number Inquiry page.
	3	*FC drives:* Identification descriptor is the 64-bit IEEE Registered World Wide Name (in NAA identifier format).
	4	Relative Port identifier
	5	Target Port Group identifier

Defined identifiers

The following identifiers will be returned in the given order. What Port Name is returned depends on which port the Inquiry is sent through.

Logical Unit Identifier

	7	6	5	4	3	2	1	0
0	Protocol Identifier (0)				Code Set (1)			
1	PIV (0)	Rsvd (0)	Association (0)		Identifier Type (3)			
2	Reserved (0)							
3	Identifier Length (8)							
4	(MSB)	SSC Device Logical Unit Name (IEEE Registered Name)						
11								(LSB)

Port Name ***(FC and SAS drives)***

	7	6	5	4	3	2	1	0
0	Protocol Identifier (0)				Code Set (1)			
1	PIV (1)	Rsvd (0)	Association (1)		Identifier Type (3)			
2	Reserved (0)							
3	Identifier Length (8)							
4	(MSB)	Port Name (IEEE Registered Name)						
11								(LSB)

Port Identifier ***(FC and SAS drives)***

	7	6	5	4	3	2	1	0
0	Protocol Identifier				Code Set (1)			
1	PIV (1)	Rsvd (0)	Association (1)		Identifier Type (4)			
2	Reserved (0)							
3	Identifier Length (4)							
4	(MSB)	Port Identifier						
7								(LSB)

The Port Identifier will be set to 1 if the addressed port is port A, and set to 2 if the addressed port is Port B.

Target Port Group Identifier

	7	6	5	4	3	2	1	0
0	Protocol Identifier				Code Set (1)			
1	PIV (1)	Rsvd (0)	Association (1)		Identifier Type (5)			
2	Reserved (0)							
3	Identifier Length (4)							
4	Reserved (0)							
5								
6	(MSB)	Target Port Group						
7								(LSB)

Target Port Group indicates the group to which the target port is a member. For more information, see "REPORT TARGET PORT GROUPS A3h" on page 186.

Target Name (code set 1)

	7	6	5	4	3	2	1	0
0	Protocol Identifier				Code Set (1)			

	7	6	5	4	3	2	1	0
1	PIV (1)	Rsvd (0)	Association (2)		Identifier Type (3)			
2	Reserved (0)							
3	Identifier Length (8)							
4	(MSB)	Device Name (IEEE Registered Name)						
11								(LSB)

Target Name (code set 2)

	7	6	5	4	3	2	1	0
0	Protocol Identifier				Code Set (2)			
1	PIV (1)	Rsvd (0)	Association (2)		Identifier Type (1)			
2	Reserved (0)							
3	Identifier Length (34)							
4	(MSB)	Vendor ID						
11								(LSB)
12	(MSB)	Product Identification						
27								(LSB)
28	(MSB)	Serial Number						
37								(LSB)

Management Network Address VPD page

The Management Network Addresses page provides a list of network addresses of management services associated with a SCSI target device, target port, or logical unit.

	7	6	5	4	3	2	1	0
0	Peripheral Qualifier			Peripheral Device Type				
1	Page Code (85h)							
2	Page Length (*n*–3)							
3								
4	(MSB)	Network Services Descriptor (first)						
								(LSB)

	(MSB)	Network Services Descriptor (last)						
n								(LSB)

Each Network Services Descriptor is defined as follows:

NOTE: The contents of descriptors are set by an application client outside the scope of the definition of this page, so no detail is given here.

	7	6	5	4	3	2	1	0
0	Rsvd (0)	Association		Service Type				
1	Reserved (0)							
2	(MSB)	Network Address Length (*n*–3)						
3								(LSB)
4	(MSB)	Network Address						
n								(LSB)

Extended INQUIRY Data VPD page

This page provides an application client with a means of obtaining information about the drive.

	7	6	5	4	3	2	1	0
0	Peripheral Qualifier (0)			Peripheral Device Type (1)				
1	Page Code (86h)							
2	Reserved (0)							
3	Page Length (3Ch)							
4	Reserved (0)				RTO (0)	Grd_Chk(0)	App_Chk(0)	Ref_Chk(0)
5	Reserved (0)			Group_Sup(0)	Prior_Sup(0)	HeadSupP(0)	OrdSup(0)	SimSup(1)
6	Reserved (0)						NV_Sup(0)	V_Sup (0)
7	Reserved (0)							
63								

SimSup	1	The drive supports the Simple Task attribute.

Mode Page Policy VPD page

The Mode Page Policy VPD page enables an application client to find what mode page policy is in effect for supported mode pages. One descriptor is returned for each mode page, or group of mode pages, that have a specific page policy in effect.

The returned data has the following format:

	7	6	5	4	3	2	1	0
0	Peripheral Qualifier (0)			Peripheral Device Type (1)				
1	Page Code (87h)							

	7	6	5	4	3	2	1	0
3	Page Length (*n*-3)							
4								
Mode Page Policy Descriptor List								

Mode Page Policy Descriptors are as follows:

	7	6	5	4	3	2	1	0
0	Reserved (0)		Policy Page Code					
1	Policy Sub-Page Code							
3	MLUS	Reserved (0)					Mode Page Policy	
4	Reserved (0)							

Policy Page Code	The mode page to which this descriptor applies.	
	3Fh	All mode pages
Policy Sub-Page Code	The sub-page to which this descriptor applies.	
	FFh	All sub-pages
MLUS	*Multiple Logical Units Shared*	
	0	The mode page and sub-page indicated are maintained separately by each logical unit.
	1	This combination of Policy Page Code and Policy Sub-Page Code is shared by more than one logical unit.
Mode Page Policy	The policy in effect for the combination of Policy Page Code and Policy Sub-Page Code:	
	00b 01b 10b 11b	Shared Per Target port Per Initiator port Per I_T Nexus

The following Mode Page Policy Descriptors are returned:

FC drives:

Policy Page Code	Policy Sub-Page Code	Mode Page Policy	MLUS
3Fh	FFh	00b	0
02h	00h	00b	1
18h	00h	00b	1
19h	00h	00b	1

SCSI drives:

Policy Page Code	Policy Sub-Page Code	Mode Page Policy	MLUS
3Fh	FFh	00b	0
02h	00h	00b	1
18h	00h	00b	1
19h	00h	00b	1
19h	01h	00b	1
19h	02h	00b	1
19h	03h	00b	1
19h	04h	00b	1

SAS drives:

Policy Page Code	Policy Sub-Page Code	Mode Page Policy	MLUS
3Fh	FFh	00b	0
02h	00h	00b	1
18h	00h	01b	1
19h	00h	01b	1
19h	01h	01b	1

SCSI Ports VPD page

The SCSI Ports VPD page provides a means of retrieving identification descriptors for all SCSI ports in a SCSI target device or SCSI target/initiator device.

The returned data has the following format:

	7	6	5	4	3	2	1	0
0	Peripheral Qualifier (0)			Peripheral Device Type (1)				
1	Page Code (88h)							
3	Page Length (*n*-3)							
4								
SCSI Port Identification Descriptor List								

FC drives:

The following SCSI Port Identification Descriptors (one per port enabled) are returned for FC drives:

	7	6	5	4	3	2	1	0
0–1	Reserved (0)							
2	Port Identifier							
3								

	7	6	5	4	3	2	1	0
4–9	Reserved (0)							
10	Target Port Descriptor Length (0Ch)							
11								
12	Protocol Identifier (0)				Code Set (1)			
13	PIV (1)	Rsvd (0)	Association (1)		Identifier Type (3)			
14	Reserved (0)							
15	Identifier Length (08h)							
16	Port Name (IEEE Registered Name—see page 16)							
23								

SCSI drives:

The following SCSI Port Identification Descriptor is returned for SCSI drives:

	7	6	5	4	3	2	1	0
0–1	Reserved (0)							
2	Relative Port Identifier (0)							
3								
4–9	Reserved (0)							
10	Target Port Descriptor Length (2Ch)							
11								
12	Protocol Identifier (1)				Code Set (2)			
13	PIV (1)	Rsvd (0)	Association (1)		Identifier Type (1)			
14	Reserved (0)							
15	Identifier Length (28h)							
16	Vendor Identification							
23								
24	Product Identification							
39								
40	Serial Number							
49								
50	"PScsi"							
55								

SAS drives:

The following SCSI Port Identification Descriptors (one per port enabled) are returned for SAS devices:

	7	6	5	4	3	2	1	0
0–1	Reserved (0)							
2	Port Identifier							
3								
4–9	Reserved (0)							
10	Target Port Descriptor Length (0Ch)							
11								
12	Protocol Identifier (6)				Code Set (1)			
13	PIV (1)	Rsvd (0)	Association (1)		Identifier Type (3)			
14	Reserved (0)							
15	Identifier Length (08h)							
16	Port Name (IEEE Registered Name—see page 16)							
23								

Port Identifier	0001h	The addressed port is port A.
	0002h	The addressed port is port B.
Protocol Identifier	00h	Fibre Channel
	01h	SCSI
	06h	SAS
Code Set	1	The Identification Descriptor is a binary field.
	2	The Identification Descriptor contains only ASCII data.
PIV	1	The Protocol Identifier field is valid. The PIV flag is set to one for an association value of 1 or 2.
Association	1	The Identifier field is associated with the port that received the request.
Identifier Type	1	The subsequent fields contain the Vendor ID followed by the product identification field from the standard inquiry data and the serial number field from the Serial Number Inquiry Page.
	3	The subsequent field is the Fibre Channel 64-bit Name Identifier.

Sequential Access Device Capabilities page

This page provides the application client with a means of determining which features are supported by the Device Server.

	7	6	5	4	3	2	1	0
0	Peripheral Qualifier (0)			Peripheral Device Type (1)				
1	Page Code (B0h)							

	7	6	5	4	3	2	1	0
2	Reserved (0)							
3	Page Length (4h)							
4	Reserved (0)							WORM
5–7	Reserved (0)							

WORM	1	The Device Server supports Write Once Read Many (WORM) operation.

Manufacturer-assigned Serial Number page

The Manufacturer-assigned Serial Number page provides the application client with a method of determining the device serial number as originally assigned by the manufacturer. The same will returned in the Unit Serial Number page unless an automation controller has provided a new serial number; however this page will always reflect the original serial number.

	7	6	5	4	3	2	1	0
0	Peripheral Qualifier (0)			Peripheral Device Type (1)				
1	Page Code (B1h)							
2	Page Length (000Ah)							
3								
4–13	Serial Number							

TapeAlert Supported Flags page

This page enables the application client to determine which TapeAlert flags are supported by the Device Server.

	7	6	5	4	3	2	1	0
0	Peripheral Qualifier (0)			Peripheral Device Type (1)				
1	Page Code (B2h)							
2	Reserved (0)							
3	Page Length (8h)							
	Flags							
4	01h (1)	02h (1)	03h (1)	04h (1)	05h (1)	06h (1)	07h (1)	08h (0)
5	09h (1)	0Ah (1)	0Bh (1)	0Ch (1)	0Dh (1)	0Eh (1)	0Fh (1)	10h (1)
6	11h (1)	12h (1)	13h (1)	14h (1)	15h (1)	16h (1)	17h (1)	18h (1)
7	19h (1)	1Ah (1)	1Bh (1)	1Ch (1)	1Dh (1)	1Eh (1)	1Fh (1)	20h (1)
8	21h (1)	22h (1)	23h (1)	24h (1)	25h (1)	26h (1)	27h (1)	28h (0)
9	29h (0)	2Ah (0)	2Bh (0)	2Ch (0)	2Dh (0)	2Eh (0)	2Fh (0)	30h (0)
10	31h (0)	32h (1)	33h (1)	34h (1)	35h (1)	36h (1)	37h (1)	38h (1)

	7	6	5	4	3	2	1	0
11	39h (1)	3Ah (1)	3Bh (1)	3Ch (1)	3Dh (0)	3Eh (0)	3Fh (0)	40h (0)

Supported flags are set to 1. For information on the flags, see "TapeAlert log page" on page 87

Drive Component Revision Levels pages

	7	6	5	4	3	2	1	0
0	Peripheral Qualifier (0)			Peripheral Device Type (1)				
1	Page Code							
2	Reserved (0)							
3	Page Length (5Ch)							
4	(MSB)	Component ("`CCCCCCCCCCCC`")						
29								(LSB)
30	(MSB)	Version ("`RRR.VVV`")						
48								(LSB)
49	(MSB)	Date ("`YYYY/MM/DD hh:mm`")						
72								(LSB)
73	(MSB)	Variant ("`XXXXXXXXXXXX`")						
95								(LSB)

The Drive Component Revision Levels pages contain details of the revisions of each of the major sub assemblies of the drive. For any given product, if these pages are the same then the drive has been built with the same components and with the same manufacturing process.

Each entry is a null-terminated ASCII string.

Page Code	**Page Code**	**Component Name**
	C0h - Firmware C1h - Hardware C2h - PCA C3h - Mechanism C4h - Head Assembly C5h - ACI	"`Firmware`" "`Hardware`" "`PCA`" "`Mechanism`" "`Head Assy`" "`ACI`"
Component	A 12-character entry to identify the component that the revision is for.	
Version	A 7-character version code with a three-digit major revision number, a period and a three-digit minor version number.	
Date	The date of the version.	

Variant	An identifier indicating what version of the product this is.	
	tbd	LTO 4 full-height FC
	tbd	LTO 4 full-height SCSI
	tbd	LTO 4 full-height SAS

LOAD/UNLOAD 1Bh

The LOAD/UNLOAD command allows the host to specify that a tape cartridge present in the drive is either made ready for data transfer ("loaded") or disabled for data transfer (if Prevent Media Removal is set). It can also cause the cartridge to be ejected from the drive ("unloaded").

Pre-execution checks

Illegal Field	Reservation	Deferred Error
Unit Attention	Diagnostic Status	Media Information

If an *unload* is to be performed, the drive checks if the tape is currently being loaded. If it is, CHECK CONDITION is reported with a sense key of NOT READY and additional sense of 0401h (becoming ready).

If a *load* is to be performed, the drive checks to ensure that a tape cartridge is present. If not, it reports CHECK CONDITION with a sense key of NOT READY and additional sense of 3A00h (medium not present). If the media is currently being unloaded or ejected, it reports CHECK CONDITION with sense key of NOT READY and additional sense of 0400h (cause not reportable).

Command descriptor block

	7	6	5	4	3	2	1	0
0	Operation Code (1Bh)							
1	Reserved (0)							Immed
2	Reserved (0)							
3	Reserved (0)							
4	Reserved (0)				Hold	EOT (0)	ReTen	Load
5	Control							

CDB fields

Immed	0	The drive reports status after the command has completed.
	1	The drive reports status when it starts the command (after any pre-execution checks and prerequisite unloads have completed).
Hold	0	A normal load/unload will be performed.
	1	A load will cause the cartridge to be pulled in and seated in the drive, but the tape will not be threaded. An unload will cause the tape to be unthreaded, but the cartridge will not be ejected. In Hold position, the Cartridge Memory is accessible.
ReTen	This field is ignored.	
Load	0	The drive performs an *unload* operation.
	1	The drive performs a *load* operation.

Load/Unload specific status

Following a successful LOAD command, CHECK CONDITION is posted to all initiators other than the initiator of the LOAD command. The sense key is set to UNIT ATTENTION, with additional sense of 2800h (not ready to ready transition). There is an exception to this: if a load occurs when the tape is already loaded, no UNIT ATTENTION sense is generated.

Once UNIT ATTENTION is cleared, unsolicited positional sense is set. The sense key will be NO SENSE with additional sense of 0004h (BOT detected).

If an unformatted tape is inserted, the drive loads it and it behaves as if it is a blank tape.

If a cartridge with no Cartridge Memory or a failed Cartridge Memory is loaded, CHECK CONDITION is returned with a sense key of MEDIUM ERROR, with additional sense of 5200h (cartridge fault).

Loading a cartridge

The drive loads an Ultrium 4, Ultrium 3 or Ultrium 2 tape automatically when it is inserted, without any host interaction. If the load is successful, media access commands are permissible (see the Media Access check).

If the tape is already loaded when a Load request is received, the tape is positioned at the beginning of the tape (as though a REWIND had been sent). Unlike a "full" load, UNIT ATTENTION with additional sense of 2800h (not ready to ready transition) is not generated for other hosts.

If the tape is in the process of being loaded when the Load request is received, the drive will wait for the load to complete and, assuming the load was successful, take one of the following actions:

- If the Load was issued by the current host (that is, a previous immediate-reported load) and completed successfully, GOOD status is reported. No further action is taken.
- If the Load was issued by some other host (or was an autoload) and completed successfully, CHECK CONDITION is reported, with a sense key of UNIT ATTENTION and additional sense of 2800h (not ready to ready transition).
- If the Load was issued by the current host and failed, CHECK CONDITION is reported, since a deferred error condition will exist for the current host.
- If the Load was issued by some other host and failed, the load will be re-attempted on behalf of the current host.

Unloading a cartridge

If an unload is requested and there is a tape present in the drive (either loaded, loading or unloading):

1. Any buffered data is written to tape.
2. The tape is rewound to the physical BOM (beginning of media).
3. If medium removal *is* prevented, CHECK CONDITION is reported with a sense key of ILLEGAL REQUEST and additional sense of 5302h (medium removal prevented).
4. GOOD status is reported if the tape unloaded successfully. Otherwise, another unload operation is initiated on behalf of the host that issued the unload request.

Following an unload, any media access commands will be rejected by the Media Access check.

- If an unload request is received while the tape is in the process of unloading (for example, as a result of pressing the eject button), it will be queued until the unload is complete.
- If an unload request is received while there is no tape present, or if a tape is present but not loaded and medium removal is prevented, GOOD status is reported.

It is possible to unload and eject the cartridge by pressing the Eject button on the front panel.

LOCATE 2Bh/92h

The LOCATE command moves the current logical position to the position specified by the command. The new position is specified by the offset from start of the media in terms of blocks. The first block (that is, BOT) is block address 0.

Any unwritten data is written to tape before the command is executed.

Pre-execution checks

Illegal Field	Reservation	Deferred Error
Unit Attention	Media Access	Diagnostic Status

Command descriptor block (10-byte version):

	7	6	5	4	3	2	1	0
0	Operation Code (2Bh)							
1	Reserved (0)					BT (0)	CP (0)	Immed
2	Reserved (0)							
3	(MSB)	Block Address						
6								(LSB)
7	Reserved (0)							
8	Partition (0)							
9	Control							

(16-byte version):

	7	6	5	4	3	2	1	0
0	Operation Code (92h)							
1	Reserved (0)			Dest Type		Rsvd (0)	CP (0)	Immed
2	Reserved (0)							BAM (0)
3	Partition (0)							
4	(MSB)	Logical Identifier						
11								(LSB)
12	Reserved (0)							
14								
15	Control							

CDB fields

BT	*Block address Type.* This field is not supported and should always be set to zero indicating that the Block Address field represents the count of all blocks and filemarks between the beginning of the media and the current logical position.	
CP	*Change Partition.* This field is not supported and should be set to zero.	
Immed	0	The drive only reports status after the Locate command has completed.
	1	The drive reports status when it starts the command and continues with the positioning in the background.
BAM	0	This field is not supported.
Block Address	The Block Address specifies the number of blocks and filemarks between BOM and the position to be located.	
Partition	Not supported.	
Dest type	00b	Specifies that the Logical Identifier field is a logical object identifier.
	01b	Specifies that the Logical Identifier field is a logical file identifier.
	Other values are not supported.	
Logical Identifier	The specific block on tape to locate. It can be a generic block, either a record or a filemark (Dest Type = 00b) or a specific filemark on tape (Dest Type = 01b).	

Locate specific status

Event	Status	Key	Additional Sense
EOD encountered	CHECK CONDN	BLANK CHECK	0005h (EOD encountered).
EOM encountered	CHECK CONDN	MEDIUM ERROR	0002h (EOT encountered). EOM bit set.
Failed to read data—media error or non-fatal drive error	CHECK CONDN	HARDWARE ERROR	3B00h (sequential positioning error)
Early Warning EOM encountered	Early warning end of medium information is not reported for Locate commands		
Data format corrupt	CHECK CONDN	MEDIUM ERROR	3001h (can't read media, unknown format)

LOG SELECT 4Ch

The Log Select command causes log data on the drive to be reset to its default value or to be set to an initiator specific value.

Pre-execution checks

Illegal Field Reservation Deferred Error Unit Attention

Command descriptor block

	7	6	5	4	3	2	1	0
0	Operation Code (4Ch)							
1	Reserved (0)						PCR	SP (0)
2	PC		Reserved (0)					
3–6	Reserved (0)							
7	(MSB)	Parameter List Length						
8								(LSB)
9	Control							

CDB fields

The following are valid combinations of values for the PCR (Parameter Code Reset), Parameter List Length and PC (Page Control) fields

PCR	Parameter List Length	PC	Result
1	0	01b *or* 11b	All the logs on the drive that can be reset are reset to their default values.
1	0	00b *or* 10b	No action is taken and GOOD status is returned.
0	>0	01b *or* 11b	Data is sent from the host and is written to the indicated logs, provided those logs are writable.

Otherwise CHECK CONDITION status is returned, the sense key is set to ILLEGAL REQUEST with additional sense of 2400h (Invalid Field in CDB).

PCR	0	Parameter Code Reset. The function performed is defined by the PC field.
SP	0	The Save Page (SP) flag is not supported and must be set to 0.
PC	The *Page Control* field defines the type of parameter values to be selected:	
	00b *or* 10b	No operation is performed. The Parameter List Length must be zero. If it is not, check condition invalid field in CDB is set.
	01b	The drive will clear logs as specified by the parameter data.
	11b	The drive will clear all of its internal logs.

Parameter List Length	0	No data is to be transferred. This is not considered an error.
	>0	Specifies how many bytes of parameter data are to be sent. The data transferred will consist of zero or more 4-byte log page headers with the page length in those headers set to *zero*. For each log page header received, the drive clears the associated log.

LOG SENSE 4Dh

LOG SENSE allows the host to read the drive's logs. A single log is returned with each invocation of LOG SENSE.

Pre-execution checks

Illegal Field Deferred Error Unit Attention

The Page Code must match one of the supported log page codes. If it does not, then CHECK CONDITION status is reported. Sense data will be as described in the Illegal Field Checks.

Command descriptor block

	7	6	5	4	3	2	1	0
0	Operation Code (4Dh)							
1	Reserved (0)						PPC (0)	SP (0)
2	PC		Page Code					
3	Reserved (0)							
4								
5	Parameter Pointer							
6								
7	(MSB)	Allocation Length						
8								(LSB)
9	Control							

CDB fields

PC	The *Page Control* field defines the type of log parameter to be returned:	
	00b	Current Threshold Values—any parameters in the log that are counters contain the maximum value that they can count to.
	01b	Current Cumulative Values—any parameters in the log that are counters contain their current counts. **NOTE:** Counts are reset to their default cumulative values (see below) following a power-on, reset or bus device reset. Media related counts are also reset following a load.
	10b	Default Threshold Values—same as the Current Threshold Values
	11b	Default Cumulative Values—any parameters in the log that are counters contain the initial values of those counters (set at power-on, reset, bus device reset and, in the case of media logs, load).
	The PC field has no effect on the data returned when the selected log contains event or trace codes rather than counts.	

Page Code	The *Page Code* field identifies which log page is being requested by the host. See page 77 for the list of valid page codes.	
Parameter Pointer	0	All parameters are returned.
	n	Parameter data of a specified log page is returned in ascending order beginning from this code. If this code is larger than the largest parameter in the page, the drive will return CHECK CONDITION with additional sense of 2400h (Invalid Field In CDB).
Allocation Length	The Allocation Length field specifies the maximum number of bytes of data that should be returned to the host. The drive will return the entire log or Allocation Length bytes, whichever is the lesser.	

Log page format

All log pages except Page 0 consist of a page code header followed by a number of parameters. The page header has the following format:

	7	6	5	4	3	2	1	0
0	Page Code							
1	Reserved (0)							
2	(MSB)	Page Length						
3								(LSB)

The Page Code specifies which Log page is being returned. The Page Length indicates the number of additional bytes in the parameters.

For the Log Select command only, the four bytes shown above are sent for each log page to be cleared. The Page Length field should be set to zero.

For the Log Sense command one or more parameters is sent. See the actual page descriptions above for more information. Note that all the parameters for a particular page must be sent. Each parameter has the following format:

	7	6	5	4	3	2	1	0
0	(MSB)	Parameter Code						
1								(LSB)
2	DU (0)	DS (1)	TSD (0)	ETC (0)	TMC(0)		Rsvd (0)	LP (0)
3	Parameter Length (*n*–3)							
4	(MSB)	Parameter Bytes						
n								(LSB)

Parameter Code	A two-byte value that uniquely identifies the parameter within the log.	
DU, TSD, ETC, TMC and LP	0	Must be zero. For a full description of these fields refer to the SCSI-2 standard.

DS	1	Must be 1, indicating that drive will maintain the saving of data itself. Note that the host must set the SP bit to 1 in a LOG SELECT command, otherwise a CHECK CONDITION will result.
Parameter Length	The length of Parameter Bytes in bytes.	
Parameter Bytes	The actual parameter data.	

Supported Log Pages page

This SCSI log may be recovered using a Log Sense command with the PC field set to anything and the Page Code field set to 00h. The page lists the page codes of other logs supported by the drive. It can neither be reset nor written.

The page has the following format:

	7	6	5	4	3	2	1	0
0	Reserved (0)		Page Code (00h)					
1	Reserved (0)							
2	(MSB)	Page Length (10h)						
3								(LSB)
4	Supported Pages (00h)							
5	Write Error Counters (02h)							
6	Read Error Counters (03h)							
7	Sequential Access Device Log (0Ch)							
8	Temperature Log (0Dh)							
9	DTD Status Log (11h)							
10	TapeAlert Response Log (12h)							
11	Requested Recovery Log (13h)							
12	Protocol-Specific Log (18h)—*FC and SAS devices only*							
13	TapeAlert Log (2Eh)							
14	Tape Usage Log (30h)							
15	Tape Capacity Log (31h)							
16	Data Compression Log (32h)							
17	Device Wellness Log (33h)							
18	Performance Log (34h)							
19	Device Status Log (3Eh)[a]							

a. May not be present in all firmware versions.

Write Error Counters log page

The Write Error Counters log is page 02h. The Page Length is 38h. There are seven parameters, 0 through 6. All fields are four bytes long.

All these counters are updated when the data set is physically written. They relate to the current tape and are cleared when the tape is unloaded.

Parm.	Definition	Description
0	Errors corrected without substantial delay	Total number of errors corrected without delay
1	Errors corrected with possible delays	Total number of errors corrected using retries
2	Total	Sum of parameters 3 and 6
3	Total errors corrected	The number of data sets that needed to be rewritten
4	Total times error correction processed	Number of CCQ sets rewritten
5	Total data sets processed	The total number of data sets written
6	Total uncorrected errors	The number of data sets that could not be written

This data can be reset to zero, but not written.

Read Error Counters log page

The Read Error Counters log is page 03h. The Page Length is 38h. There are seven parameters, 0 through 6. All fields are four bytes long.

All these counters are updated when the data set is physically read. They relate to the current tape and are cleared when the tape is unloaded.

Parm.	Definition	Description
0	Errors corrected without substantial delay	Total number of errors corrected without delay
1	Errors corrected with possible delays	Total number of errors corrected using retries
2	Total	Sum of parameters 3 and 6
3	Total errors corrected	The number of data sets that were corrected after a read retry
4	Total times error correction processed	Number of times C2 correction is invoked
5	Total bytes processed	The total number of data sets read
6	Total uncorrected errors	The number of data sets that could not be read after retries

This data can be reset to zero, but not written.

Sequential Access Device log page

The Sequential Access Device Log page is page 0Ch. The Page Length is 40h. Five parameters are supported, all eight bytes long. With the exception of 0100h (cleaning required), they are updated when a data set is logically written and cleared at the start of tape load; the values of each parameter relate to the current tape.

Parm.	Description
0001h	The number of data bytes received from application clients during write command operations. This is the number of bytes transferred over SCSI, before compression.
0002h	The number of data bytes written to the media as a result of write command operations, not counting the overhead from ECC and formatting. This is the number of data bytes transferred to media, after compression.
0003h	The number of data bytes read from the media during read command operations, not counting the overhead from ECC and formatting. This is the number of data bytes transferred from media with compression.
0004h	The number of data bytes transferred to the initiator or initiators during read command operations. This is the number of bytes transferred over SCSI, after decompression.
0100h	Cleaning required, a non-volatile cleaning indication.

A non-zero value of parameter 0100H (cleaning required) relates to the drive It indicates that a condition requiring cleaning has been detected and a subsequent cleaning cycle has not yet been completed. The parameter is updated asynchronously. It persists across hard resets and power cycles, and is cleared when a cleaning cycle is performed.

Temperature log page

The Temperature Log page is page 0Dh. The following parameters are supported:

Parm.	Description
0h	The current temperature of the drive in °C (binary value). If the temperature is less than 0, 0 is reported. If the temperature sensor is not functioning properly, FFh is reported.
1h	The maximum temperature in °C (binary value) at which the drive can operate continuously without degrading reliability and operation. This parameter is not supported so FFh is returned.

	7	6	5	4	3	2	1	0
0	Page Code (0Dh)							
1	Reserved (0)							
2	(MSB)	Page Length (0Ch)						
3								(LSB)
4	(MSB)	Parameter Code (0000h)						
5								(LSB)
6	DU (0)	DS (1)	TSD (0)	ETC (0)	TMC (0)		LBIN (1)	LP (1)

	7	6	5	4	3	2	1	0
7	Parameter Length (2h)							
8	Reserved (0)							
9	Temperature (°C)							
10	(MSB)	Parameter Code (0001h)						
11								(LSB)
12	DU (0)	DS (1)	TSD (0)	ETC (0)	TMC (0)		LBIN (1)	LP (1)
13	Parameter Length (2h)							
14	Reserved							
15	Reference Temperature (°C)							

DTD Status log page

The Data Transfer Device (DTD) Status Log page is page 11h. The following parameters are supported:

Parm.	Description
0000h	Very High Frequency data
0001h	Very High Frequency polling delay
0100h–01FFh	DTD Primary Port status

Very high frequency data (VHF)

	7	6	5	4	3	2	1	0
0	(MSB)	Parameter Code (0000h)						
1								(LSB)
2	DU (0)	DS (1)	TSD (0)	ETC (0)	TMC (0)		LBIN (1)	LP (1)
3	Parameter Length (4h)							
4	PAMR	HIU	MAcc	Cmpr	WrtP	CRqst	CRqrd	DInit
5	InXtm	Rsvd (0)	RAA	MPrsnt	Rsvd (0)	MStd	MThrd	DAcc
6	Tape Motion Status							
7	Reserved (0)					RRqst	IntfC	TAFC

PAMR	Prevent/Allow Medium Removal bit
HIU	Host Initiated Unload bit
MAcc	If set, the MAM is accessible. **MPrsnt** must be set as well.
Cmpr	Compress bit. If set, the DTD currently has data compression enabled.
WrtP	Write Protect bit. If set, the media in the DTD is physically write-protected. Only valid if **MPrsnt** is set.

CRqst	Clean Requested bit	
CRqrd	Cleaning Required. If set, head cleaning must be performed before normal data operations are possible. This takes priority over **CRqst**, and both may be set at the same time.	
DInit	DTD Initialized. When set, the data returned by the VHF parameter data is valid.	
InXtn	In Transition. If 0, the DTD is in the state reflected by the rest of byte 5 and is not attempting to leave this state. This bit must be 0 if **RRqst** is set.	
RAA	Robotic Access Allowed. If set, robotic media access to the DTD is allowed.	
MPrsnt	Media Present bit (hardware sensor)	
MStd	Media Seated. If set, the tape is mechanically seated, that it physical loading is complete. Otherwise the tape is still threading.	
MThrd	Media Threaded	
DAcc	Data Accessible. If set, the DTD has finished processing a load operation. The bit is cleared to 0 at the beginning of the next unload operation.	
Tape Motion Status	00h	No tape motion
	01h	Cleaning operation in progress
	02h	Tape being loaded
	03h	Tape being unloaded
	04h	Tape in motion
	05h	Reading
	06h	Writing
	07h	Locating
	08h	Rewinding
	09h–7Fh	Reserved
	80h–FFh	Vendor unique
RRqst	Recovery Requested. Set to 1 as long as a recovery procedure is available. In these circumstances, **InXtn** must be 0.	
IntfC	Interface Changed. If set, the interface status has changed since the last time this page was retrieved. It is cleared to 0 when the page is retrieved for the initiator.	
TAFC	If set, at least one TapeAlert Flag had Changed since the last time the TapeAlert flags were retrieved.	

Very high frequency polling delay

	7	6	5	4	3	2	1	0
0	(MSB)	Parameter Code (0001h)						
1								(LSB)
2	DU (0)	DS (1)	TSD (0)	ETC (0)	TMC (0)		LBIN (1)	LP (1)
3	Parameter Length (2h)							
4	(MSB)	VHF Polling Delay						
5								(LSB)

The **VHF Polling Delay** is 16 milliseconds.

DTD primary port status

SAS drives

	7	6	5	4	3	2	1	0
0	(MSB)	Parameter Code 0101h (Port 0) or 0102h (Port 1)						
1								(LSB)
2	DU (0)	DS (1)	TSD (0)	ETC (0)	TMC (0)		LBIN (1)	LP (1)
3	Parameter Length (4h)							
4	Negotiated Physical Link Rate				Reserved (0)		Signal	PIC
5	(MSB)	Current Hashed SAS Address						
7								(LSB)

Fibre Channel

Port 0

	7	6	5	4	3	2	1	0
0	(MSB)	Parameter Code (0101h)						
1								(LSB)
2	DU (0)	DS (1)	TSD (0)	ETC (0)	TMC (0)		LBIN (1)	LP (1)
3	Parameter Length (8h)							
4	CurrTop	Current Speed			LC	Conflict	Signal	PIC
5	(MSB)	Current N_Port ID						
7								(LSB)
8–10	Reserved (0)							
11	Rsvd	Current FC_AL Loop ID						

Port 1

	7	6	5	4	3	2	1	0
0	(MSB)	Parameter Code (0102h)						
1								(LSB)
2	DU (0)	DS (1)	TSD (0)	ETC (0)	TMC (0)		LBIN (1)	LP (1)
3	Parameter Length (8h)							
4	CrrTop	Current Speed			LC	Conflict	Signal	PIC
5	(MSB)	Current N_Por_ID						
7								(LSB)
8–10	Reserved (0)							
11	Rsvd	Current FC_AL Loop ID						

CurrTop	*Current Topology*. Ignored when the PIC bit is set to zero.	
	0	The DT device primary port is currently operating in arbitrated loop mode.
	1	The DT device primary port is currently operating in point-to-point mode.
Current Speed	The bit rate at which the DT device primary port is currently operating. The field is ignored when the PIC bit is set to zero. Valid values are:	
	000b 001b 010b 011b 100b–111b	1 Gbps 2 Gbps 4 Gbps 8 Gbps reserved
LC	*Login Complete*	
	0	A login has not successfully completed through the PRLI phase on the DT device primary port.
	1	At least one initiator port has completed process login (PRLI) with the DT device on the DT device primary port.
Conflict	0	There is no AL_PA conflict.
	1	Another device has the required Hard AL_PA, or no AL_PA is available for the DT device primary port.
Signal	0	A signal is not detected.
	1	A signal is detected at the DT device primary port.

PIC	*Port Initialization Complete*	
	0	The DT device primary port is not in the ACTIVE state and is not synchronized, or has not successfully completed the most recent Loop Initialization Process.
	1	The FC_Port state machine is in the ACTIVE state and the DT device primary port is operating in point-to-point topology, or the most recent Loop Initialization Process has completed successfully
Current N_Port ID	The 24-bit N_Port ID that is assigned to the DT device primary port. The field is ignored when the PIC bit is set to zero.	
Current FC_AL Loop ID	The loop identifier that is assigned to the DT device primary port. The field is ignored when the PIC bit is set to zero or when the CurrTop bit is set to one.	

TapeAlert Response log page

The TapeAlert Response log page is page 12h. There is only 1 parameter, which contains 64 flags. For a list of supported flags, see the "TapeAlert log page" on page 87.

	7	6	5	4	3	2	1	0
0	Page Code (12h)							
1	Reserved 90)							
2	(MSB)	Page Length (000Ch)						
3								(LSB)
4	(MSB)	Parameter Code (0000h)						
5								(LSB)
6	DU (1)	DS (1)	TSD (1)	ETC (0)	TMC (0)		LBIN (1)	LP (1)
7	Parameter Length (08h)							
8	Flag 01h	Flag 02h	Flag 03h	Flag 04h	Flag 05h	Flag 06h	Flag 07h	Flag 08h
9	Flag 09h	Flag 0Ah	Flag 0Bh	Flag 0Ch	Flag 0Dh	Flag 0Eh	Flag 0Fh	Flag 10h
10	Flag 11h	Flag 12h	Flag 13h	Flag 14h	Flag 15h	Flag 16h	Flag 17h	Flag 18h
11	Flag 19h	Flag 1Ah	Flag 1Bh	Flag 1Ch	Flag 1Dh	Flag 1Eh	Flag 1Fh	Flag 20h
12	Flag 21h	Flag 22h	Flag 23h	Flag 24h	Flag 25h	Flag 26h	Flag 27h	Flag 28h
13	Flag 29h	Flag 2Ah	Flag 2Bh	Flag 2Ch	Flag 2Dh	Flag 2Eh	Flag 2FH	Flag 30h
14	Flag 31h	Flag 32h	Flag 33h	Flag 34h	Flag 35h	Flag 36h	Flag 37h	Flag 38h
15	Flag 39h	Flag 3Ah	Flag 3Bh	Flag 3Ch	Flag 3Dh	Flag 3Eh	Flag 3Fh	Flag 40h

Each flag is either zero to indicate the corresponding condition is deactivated or one to indicate that the corresponding condition has been activated.

Flags are *not* cleared when the log is read. The log is cleared at power-on or on a reset condition. Specific flags may be cleared when corrective action has removed the condition that caused the flag to be activated.

Requested Recovery log page

The Requested Recovery log page is 13h. One parameter is supported:

Parameter	Description
0000h	Recovery procedures
0001h–FFFFh	Reserved

Recovery procedures

	7	6	5	4	3	2	1	0
0	(MSB)	Parameter Code (0000h)						
1								(LSB)
2	DU (1)	DS (1)	TSD (1)	ETC (0)	TMC (0)		LBIN (1)	LP (1)
3	Parameter Length (1h)							
4	Recovery not requested (0)							

Protocol-Specific Log page *(SAS drives only)*

	7	6	5	4	3	2	1	0
0	Page Code (18h)							
1	Reserved (0)							
2	(MSB)	Page Length (70h)						
3								(LSB)
4	Protocol-Specific Log Parameter 0							
...								
...	Protocol-Specific Log Parameter 1							
m								

Protocol-specific log parameters

	7	6	5	4	3	2	1	0
0	(MSB)	Parameter Code [0,1]						
1								(LSB)
2	DU (0)	DS (0)	TSD (0)	ETC (0)	TMC(0)		LBIN (1)	LP (1)
3	Parameter Length (34h)							
4	Reserved (0)				Protocol Identifier (6h)			
5–6	Reserved (0)							
7	Number of Phys (1)							

	7	6	5	4	3	2	1	0
8	Reserved (0)							
9	PHY Identifier [0,1]							
10–11	Reserved (0)							
12	Rsvd (0)	Attached Device Type			Reserved (0)			
13	Reserved (0)				Negotiated Physical Link Rate			
14	Reserved (0)				Attached SSP Initiator Port	Attached STP Initiator Port	Attached SMP Initiator Port	Rsvd (0)
15	Reserved (0)				Attached SSP Target Port	Attached STP Target Port	Attached SMP Target Port	Rsvd (0)
16	(MSB)	SAS Address						
23								(LSB)
24	(MSB)	Attached SAS Address						
31								(LSB)
32	Attached PHY Identifier							
33–39	Reserved (0)							
40	(MSB)	Invalid DWORD Count						
43								(LSB)
44	(MSB)	Running Disparity Error Count						
47								(LSB)
48	(MSB)	Loss of DWORD Synchronization Count						
51								(LSB)
52	(MSB)	PHY Reset Problem Counts						
55								(LSB)

Parameter Code	The relative port identifier	
PHY Identifier	The same value as the Parameter Code	
Negotiated Physical Link Rate	8 9	1.5 Gbps 3.0 Gbps
Invalid DWORD Count	Number of invalid DWORDS received outside of PHY reset sequences.	
Running Disparity Error Count	Number of DWORDS containing running disparity errors received outside the PHY reset sequences.	

Loss of DWORD synchronization	Number of times the PHY restarted the link reset sequence because it lost DWORD synchronization.
PHY Reset Problem Count	Number of times the PHY did not obtain DWORD synchronization during the final SAS speed negotiation window.

NOTE: The counters are the only fields affected by a LOG SELECT command or the value of the PC field in the LOG SENSE command.

TapeAlert log page

NOTE: Reading the TapeAlert log clears the flags, as stipulated in the TapeAlert specification.

The TapeAlert log page is page 2Eh. There are 64 parameters numbered from 1 through 64. Only parameters 1–18, 20–23, 29–39 and 55–60 have definitions for tape drives without attached loaders. The remaining parameters are always zero.

The Parameter Control Byte value for each parameter is 40h.

All parameters are one byte long. Each parameter is either zero to indicate the corresponding condition has not occurred or one to indicate that the corresponding condition has occurred. All log parameters are cleared when the log is read. The Log is also cleared at power on, on a reset condition and by a Log Select command. Specific flags may be cleared when corrective action has removed the condition that caused the flag to be set.

The supported parameters are as follows. The Set column indicates if the flag can be set by drives. The other flags are supported but never set.

Parameter	Description	Type	Set
1	Read Warning	Warning	✓
2	Write Warning	Warning	
3	Hard Error	Warning	✓
4	Media	Critical	✓
5	Read Failure	Critical	
6	Write Failure	Critical	✓
7	Media Life	Warning	
8	Not Data Grade	Warning	
9	Write-Protect	Critical	✓
10	No Removal	Information	✓
11	Cleaning Media	Information	✓
12	Unsupported Format	Information	✓
13	Recoverable Mechanical Cartridge Failure	Critical	✓
14	Unrecoverable Mechanical Cartridge Failure	Critical	

Parameter	Description	Type	Set
15	Memory Chip in Cartridge Failure	Warning	✓
16	Forced Eject	Critical	✓
17	Read-Only Format	Warning	
18	Tape Directory Corrupted	Warning	✓
19	Nearing Media Life	Information	✓
20	Clean Now	Critical	✓
21	Clean Periodic	Warning	
22	Expired Cleaning Media	Critical	✓
23	Invalid Cleaning Cartridge	Critical	✓
24	Retension Requested	Warning	
25	Dual-port Interface Error	Warning	
26	Cooling Fan Failure	Warning	
27	Power Supply Failure	Warning	
28	Power Consumption	Warning	
29	Drive Maintenance	Warning	
30	Hardware A	Critical	✓
31	Hardware B	Critical	✓
32	Interface	Warning	
33	Eject Media	Critical	✓
34	Download Fault	Warning	✓
35	Drive Humidity	Warning	
36	Drive Temperature	Warning	✓
37	Drive Voltage	Warning	
38	Predictive Failure	Critical	
39	Diagnostics Required	Warning	
50	Lost Statistics	Warning	✓
51	Tape Directory Invalid at Unload	Warning	✓
52	Tape System Area Write Failure	Critical	
53	Tape System Area Read Failure	Critical	
54	No Start of Data	Critical	
55	Loading Failure	Critical	✓
56	Unrecoverable load Failure	Critical	✓
57	Automation Interface Failure	Critical	
58	Firmware Failure	Warning	✓
59	WORM medium — integrity check failed	Warning	✓
60	WORM medium — overwrite attempted	Warning	✓

Tape Usage log page

The Tape Usage log page code is 30h. There are nine parameters. These are all read directly from the LTO-CM Tape Usage Log.

This data relates to the current tape and can be neither reset nor written.

Parm.	Description	Length	Updated When
1	Thread Count	4	Tape threaded
2	Total Data Sets Written	8	Data set physically written
3	Total Write Retries	4	Data set physically written
4	Total Unrecovered Write Errors	2	Data set physically written
5	Total Suspended Writes	2	Data set physically written
6	Total Fatal Suspended Writes	2	Data set physically written
7	Total Data Sets Read	8	Data set physically written
8	Total Read Retries	4	Data set physically written
9	Total Unrecovered Read Errors	2	Data set physically written

Tape Capacity log page

The Tape Capacity log page code is 31h. The Page Length is 20h. There are four parameters, 1 through 4. Parameters 2 and 4 are not supported and are returned as zero. All parameters are 4 bytes long. All parameters are in megabytes (1,048,576 bytes) and assume no compression. This data relates to the current tape and can be neither reset nor written.

The supported parameters are as follows:

Parm.	Description	Length	Updated When
1	Main Partition Remaining Capacity	4	Data set physically written
2	Alternate Partition Remaining Capacity	4	n/a
3	Main Partition Maximum Capacity	4	If Set Capacity succeeds
4	Alternate Partition Maximum Capacity	4	n/a

Data Compression log page

The Data Compression log page code is 32h and the page length is 4Ch. There are ten parameters, 0 through 9. Parameters 0 and 1 are two bytes long. Parameters 2 through 9 are each 4 bytes long.

The supported fields are listed below. Parameters 2 through 9 occur as pairs that represent a large number of bytes transferred. The first four-byte parameter represents the number of whole megabytes transferred, rounded to the nearest megabyte. The second four-byte parameter represents the difference between this number of megabytes and the actual number of bytes. This may be a signed quantity.

This data relates to the current tape and is cleared at the start of tape load. It may not be written.

Parameter	Description	Length	Updated When
0	Read compression ratio X 100	2	Data set logically read
1	Write compression ratio X 100	2	Data set logically written
2	Megabytes transferred to host	4	Data set logically read
3	Bytes transferred to host	4	Data set logically read
4	Megabytes read from tape	4	Data set logically read
5	Bytes read from tape	4	Data set logically read
6	Megabytes transferred from host	4	Data set logically written
7	Bytes transferred from host	4	Data set logically written
8	Megabytes written to tape	4	Data set logically written
9	Bytes written to tape	4	Data set logically written

Device Wellness Log page

The Device Wellness Log page has page code 33h and consists of a FIFO parameter code list of the last 16 drive error conditions caused by various sense keys.

However, to enable connectivity to the peripheral management tools only, the page structure has been implemented, but all parameter values returned by the drive will be zero.

	7	**6**	**5**	**4**	**3**	**2**	**1**	**0**
0	Page Code (33h)							
1	Reserved (0)							
2	(MSB)	Page Length (0100h)						
3								(LSB)
4+(16*n*)	Parameter Code *n* (*n* = 0 through 15							
5+(16*n*)								
6+(16*n*)	DU (0)	DS (1)	TSD (1)	ETC (0)	TMC(0)		LBIN (0)	LP (1)
7+(16*n*)	Reserved (0)							
8+(16*n*)	(MSB)	Time Stamp						
11+(16*n*)								(LSB)
12+(16*n*)	(MSB)	Media Signature						
15+(16*n*)								(LSB)
16+(16*n*)	Sense Key)							
17+(16*n*)	Additional Sense Code							
18+(16*n*)	Addistional Sense Qualifier							
19+(16*n*)	Additional Error Information							

Performance Data log page

The Performance Data log page is 34h. This log is intended to report data of interest to a user/application on how efficiently the drive is being used.

Parameter	Description	Length	Updated
0	Repositions per 100 MB	2	After each 100 MB has been physically written
1	Data rate into buffer	2	After each data set has been logically written
2	Maximum data rate	2	After each data set has been logically written
3	Current data rate	2	After each data set has been logically written
4	Native data rate	2	Fixed

The Parameter Control Byte is 60h for all the parameters.

All the parameters relate to the current tape. They are all cleared at the start of tape load, except Parameter 4, which is never cleared. All data will be reset when the log page is reset. The parameters are as follows.

Repositions per 100 MB	Number of tape direction changes per 100 MB written. The higher the figure the more wear occurs.			
Data rate into buffer	Rate at which data is entering the buffer (after data compression), given in units of 100 KB/s. This is the true 'tape' data rate.			
Maximum data rate	Given the compressibility of the data that has been sent to the drive, this is the maximum data rate that could be achieved, given in units of 100 KB/s. The figure is calculated based on the compressibility of each dataset received, and datasets that have a compressibility greater than the compression bandwidth of the drive will be 'capped'.			
Current data rate	Rate at which data is being accepted by the drive *before* compression, given in units of 100 KB/s.			
Native data rate	The native rate (that is, without using compression) at which the drive writes data to tape, given in units of 100 KB/s:			
	Drive	**Value**	**Native Data Rate**	
	LTO 4	04B0h	120 MB/s	**NOTE:** These figures are for native media types and will vary when earlier format media is loaded

Device Status log page

The Device Status log page is 3Eh, with a page length of 28h. PCB = Parameter Control Byte.

Parameter	Description	Length	Updated	PCB
0	Device Type	4	Obsolete. Set to all zeros.	40h
1	Device Status Bits	4	Used to provide remote status of selected monitoring points on the drive. See below for the format.	40h

Parameter	Description	Length	Updated	PCB
2	Total Number of Loads	4	Number of loads/unloads over the life of the device.	60h
3	Cleaning Cartridge Status	4	Accumulated number of uses of the *last* cleaning cartridge. Updated after the tape is loaded and a cleaning event attempted. If there is no value, FFFFFFFFh is returned.	40h
4	Product Number	4	Unique number that identifies the product	40h

Device Status Bits

The parameter has the following format:

	7	6	5	4	3	2	1	0
0	Reserved (0)					CRQ	CR	ECT
1	Reserved (0)				Temperature		Device Status	
2	Reserved (0)						Medium Status	
5	Reserved (0)							

CRQ	Cleaning Required flag	
CR	Cleaning Requested flag	
ECT	Exhausted Cleaning Tape flag	
Temperature	00b 01b 10b 11b	Field not supported Temperature OK Temperature degraded Temperature failed
Device Status	The overall status of the drive:	
	00b 01b 10b 11b	Field not supported Device status OK Device status degraded Device status failed
Medium Status	The overall status of the tape cartridge:	
	00b 01b 10b 11b	Field not supported Medium status OK Medium status degraded Medium status failed

MODE SELECT 15h/55h

MODE SELECT is used to send configuration data to the drive. Both 6-byte and 10-byte versions of the command are supported.

The Mode Select parameter list is transferred from the host to the drive during the data-out phase. It contains zero or more bytes of information. If any information is sent, it should consist of a Mode Parameter Header followed by zero or more mode select pages. Internal parameters are set according to the values specified in the header and pages. Fields in the parameter list are checked and the operation will terminate if an error is found.

NOTE: The drive does not check that the parameter list is correct before modifying internal parameters. The list is checked as the operation proceeds, so if there is an error in the list, all parameters up to that point will be set to their new values, but the parameter in error and later parameters will not be updated.

Pre-execution checks

Illegal Field Reservation Deferred Error Unit Attention

NOTE: Failure to flush write-behind data will be reported as a Deferred Error.

The parameter list length must be such that only "entire" parts of a parameter list are sent. It is illegal to send a partial mode parameter header, a partial mode block descriptor or a partial mode page. If this happens, then CHECK CONDITION status is reported. The sense key is set to ILLEGAL REQUEST. The additional sense is set to 1A00h (parameter list length error).

Extra checks may be performed on the data, see the descriptions for the parameter list for more details.

Command descriptor block

6-Byte version

	7	6	5	4	3	2	1	0
0	Operation Code (15h)							
1	Reserved (0)			PF	Reserved (0)			SP (0)
2–3	Reserved (0)							
4	Parameter List Length							
5	Control							

10-byte version

	7	6	5	4	3	2	1	0
0	Operation Code (55h)							

	7	6	5	4	3	2	1	0
1	Reserved (0)			PF	Reserved (0)			SP (0)
2–6	Reserved (0)							
7	(MSB)	Parameter List Length						
8								(LSB)
9	Control							

CDB fields

PF	*Page Format*	
	0	The MODE SELECT parameter data is not SCSI-2 mode page compatible. Only the parameter header and block descriptor may be sent.
	1	The parameter data is SCSI-2 mode-page compatible.
SP	*Save Pages*	
	0	This bit is not supported and must be zero.
Parameter List Length	0	No data is transferred.
	>0	The length in bytes of the MODE SELECT parameter list to be transferred.

Specific status

Following a successful Mode Select command, Unit Attention status is posted to all initiators other than the initiator of the Mode Select command. The sense key is set to UNIT ATTENTION. Additional sense is set to 2A01h (mode parameters changed).

Mode parameter pages

Mode data is recovered from the drive by means of a MODE SENSE command. After modification, it is returned to the drive via a MODE SELECT command. In real-life, many hosts do not use MODE SENSE and return whatever MODE SELECT data suits them into the drive.

Mode page representation

Certain conventions are used in the following Mode Parameter pages in order to describe the nature of the parameters. Most parameters are given by name, followed by a number in brackets. The brackets have the following meanings:

Square brackets [ ] Square brackets indicate that the parameter may be modified. The number inside the brackets is the default value for the field—in other words, the power-up or reset value.

- MODE SELECT may modify this value by sending the page with a new value in the field.
- MODE SENSE (current values) will return the current value of the parameter.
- MODE SENSE (default values) will return the value in brackets [].
- MODE SENSE (changeable values) will return a value of all ones.

Round brackets ( ) Round brackets indicate that the parameter is fixed. The number inside the brackets is the fixed value for the field.

- MODE SELECT must set the parameter to this value, otherwise CHECK CONDITION will be reported with a sense key of ILLEGAL REQUEST.
- MODE SENSE (default values) will return the fixed value.
- MODE SENSE (changeable values) will return a value of all zeros.

Mode data format

Mode data consists of a 4-byte header, optionally followed by block descriptor and Mode Parameter pages:

	7	6	5	4	3	2	1	0
1	(MSB)	Mode Parameter Header						
3								(LSB)
4	(MSB)	Mode Block Descriptor						
11								(LSB)
12	(MSB)	Mode Parameter Pages						
n								(LSB)

Mode parameter pages

HP LTO Ultrium drives support the following pages:

- 01h "Read-Write Error Recovery mode page" on page 98
- 02h "Disconnect-Reconnect page" on page 99
- 0Ah "Control mode page" on page 102
- 0Fh "Data Compression Characteristics page" on page 103
- 10h "Device Configuration page" on page 104
- 11h "Medium Partitions mode page" on page 106
- 18h *FC drives:* "Protocol-Specific Logical Unit mode page (FC drives)" on page 107
- 18h *SCSI drives:* "Protocol-Specific Logical Unit mode page (SCSI drives)" on page 108
- 18h *SAS drives:* "Protocol-Specific Logical Unit mode page (SAS drives)" on page 108
- 19h *FC drives:* "Protocol-Specific Port mode page (FC drives)" on page 108
- 19h *SCSI drives:* "Protocol-Specific Port mode page (SCSI drives)" on page 112
- 19h *SAS drives* "Protocol-Specific Port mode page (SAS drives)" on page 116
- 1Ah "Power Condition mode page" on page 119
- 1Ch "Information Exceptions mode page" on page 120
- 1Dh "Medium Configuration mode page" on page 121
- 3Bh "Serial Number Override vendor-unique mode page" on page 122
- 3Ch "Device Time mode page" on page 123

- 3Dh "Extended Reset vendor-unique mode page" on page 125
- 3Fh *OBDR FW variants only:* "CD-ROM Emulation/Disaster Recovery mode page" on page 126
- Return all pages (page 3Fh) — for MODE SENSE only

Mode parameter header

The Mode Parameter header must always be sent at the start of Mode Select data. It is always returned at the start of Mode Sense data.

6-byte header

The 6-byte Mode Parameter header has the following format:

	7	6	5	4	3	2	1	0
0	Mode Data Length							
1	Medium Type [00h or 01h if WORM media is loaded or 80h if in CD-ROM mode]							
2	WP	Buffered Mode [001b]			Speed (0)			
3	Block Descriptor Length							

10-byte header

The 10-byte Mode Parameter header has the following format:

	7	6	5	4	3	2	1	0
0	(MSB)	Mode Data Length						
1								(LSB)
2	Medium Type [00h or 01h if WORM media is loaded (FC and SCSI drives) or 80h if in CD-ROM mode]							
3	WP	Buffered Mode [001b]			Speed (0)			
4		Reserved (0)						
5								
6	(MSB)	Block Descriptor Length						
7								(LSB)

Header fields

Mode Data Length	*MODE SELECT:*	Mode Data Length field must be zero.
	MODE SENSE:	Mode Data Length field is set to the number of bytes of data available to return excluding itself (in other words, the number of actual bytes available is mode data length + 1 for 6-byte MODE SENSE or +2 for 10-byte MODE SENSE). **NOTE:** The actual amount returned may be truncated to the allocation length for the command.

Medium Type	00h	The usual medium type when the drive is in normal tape drive mode.
	01h	WORM media is loaded.
	80h	The tape drive is in CD-ROM emulation mode for OBDR.
WP	*Write Protect.* Ignored for MODE SELECT.	
	0	MODE SENSE: The tape is write-enabled
	1	MODE SENSE: The tape is write-protected
Buffered Mode	0	The drive will not report GOOD status on Write and Write Filemarks commands until all data (blocks and filemarks) has been successfully written to tape.
	1	The drive will report GOOD status for Write and Write Filemarks commands as soon as all the data or marks specified in the command have been transferred to the data buffer. Data for multiple commands from different initiators may be buffered. This is the default value. **NOTE:** It is strongly recommended that this field is set to 1, otherwise there will be significant performance penalties. A method of flushing the buffer to tape without changing logical position is available with the Write Filemarks command.
	2	The drive will report GOOD status for Write and Write Filemarks commands as soon as all the data or marks specified in the command have been transferred to the data buffer **and** all buffered data from different initiators has been successfully written to the tape.
Speed	0	The Speed field is not used and should be zero.
Block Descriptor Length	Only the values 0 and 8 are valid. Any value other than 0 or 8, CHECK CONDITION status is reported. See the Parameter List check for details of the sense data generated.	
	0	No block descriptor is being transferred.
	8	The Mode Parameter header must be followed by the 8-byte block descriptor described in the next section.

Mode block descriptor

The format of the Mode Parameter block descriptor is as follows:

	7	6	5	4	3	2	1	0
0	Density Code							
1	(MSB)	Number of Blocks (0)						
3								(LSB)
4	Reserved (0)							
5	(MSB)	Block Length [0 or 800h]						
7								(LSB)

Mode Parameter block descriptor fields

Density Code	This specifies the format of the media loaded in the drive. See "REPORT DENSITY SUPPORT 44h" on page 175 for details.	
Block Length	This indicates the size of fixed blocks for fixed mode Read and Write commands. It is also used in the decision process on whether to report an illegal length record on reads.	
	00h	The default value when the drive is in normal tape drive mode.
	800h	The tape drive is in CD-ROM emulation mode for OBDR.

Read-Write Error Recovery mode page

The Read-Write Error Recovery mode page has the following format:

	7	6	5	4	3	2	1	0
0	PS (0)	Rsvd (0)	Page Code {01h}					
1	Additional Page Length {0Ah}							
2	Reserved (0)		TB (0)	Res (0)	EER (1)	PER [0]	DTE (0)	DCR (0)
3	Read Retry Count							
4–7	Reserved (0)							
8	Write Retry Count							
9–11	Reserved (0)							

Read-Write Error Recovery page fields

TB	*Transfer Block*	
	0	Always set to 0, meaning that an unrecoverable data block will not be transferred to the host.
EER	*Enable Early Recovery*	
	1	The drive should attempt error correction before performing retries.
PER	Post Error. Although this bit is changeable, the drive's internal behavior always corresponds to PER=0.	
	0	The drive does not report CHECK CONDITION for recovered errors. The DTE bit must also be zero.
	1	The drive reports CHECK CONDITION for recovered errors.
DTE	*Disable Transfer on Error*	
	0	Always set to 0, meaning that the drive will not terminate the transfer for errors recovered within the limits established by the read-write error parameters.
DCR	*Disable Correction*	
	0	Always set to 0, meaning that the use of error correction codes for error recovery is allowed.

Read Retry Count	The number of times the drive will attempt its recovery algorithm during a read operation before reporting an unrecoverable error.	
	0	The drive will not use its recovery algorithm during read operations.
	15h	The drive will attempt 21 retries.
Write Retry Count	The number of times the drive will attempt its recovery algorithm during a write operation before reporting an unrecoverable error.	
	0	The drive will not use its recovery algorithm during read operations.
	0Ah	The value for all LTO Ultrium drives, giving 10 retries.

Disconnect-Reconnect page

FC drives

The Disconnect-Reconnect page has the following format for FC drives:

	7	6	5	4	3	2	1	0
0	PS (0)	Rsvd (0)	Page Code {02h}					
1	Additional Page Length {0Eh}							
2	Buffer Full Ratio (0)							
3	Buffer Empty Ratio (0)							
4	(MSB)	Bus Inactivity Limit (0)						
5								(LSB)
6	(MSB)	Disconnect Time Limit [0]						
7								(LSB)
8	(MSB)	Connect Time Limit (0)						
9								(LSB)
10	(MSB)	Maximum Burst Size [0]						
11								(LSB)
12	EMDP (0)	FAA [1]	FAB (1)	FAC (1)	Reserved (0)			
13–15	Reserved (0)							

Disconnect-Reconnect page fields

Buffer Full Ratio	0	Buffer management is controlled by the drive, so this should always be zero.
Connect Time Limit	0	Buffer management is controlled by the drive, so this should always be zero.
Bus Inactivity Limit	0	This parameter is not supported and should be zero.
Disconnect Time Limit	0	This parameter is not supported and should be zero.
Connect Time Limit	0	This parameter is not supported and should be zero.

Maximum Burst Size	>0	The maximum amount of data that will be transferred during a data-in or data-out phase before disconnecting. This field is in units of 512 bytes. The maximum burst size that the drive supports is 127 (7Fh) blocks of 512 bytes, that is, 64 KB less 512 bytes.
	0	The drive may send bursts of any size. This is the default value.
EMDP	0	Enable Modify Data Pointers is not facilitated by the drive. The drive will always have continually increasing and contiguous data relative offset values for FCP_DATA.
FAA	This bit, together with FAB and FAC, indicate whether the drive will use fairness arbitration to send frames to the initiator.	
	0	The drive will not use fairness when arbitrating to send FCP_DATA frames.
	1	The drive will use fairness when arbitrating to send FCP_DATA frames.
FAB	1	The drive will use fairness when arbitrating to send FCP_XFER_RDY frames.
FAC	1	The drive will use fairness when arbitrating to send an FCP_RSP frame.

NOTE: If the host does not grant disconnect privilege in its IDENTIFY message these parameters become meaningless. The drive will stay connected on the bus for the duration of an operation or until the host sends a mid-operation IDENTIFY granting disconnect privilege.

SCSI drives

The Disconnect-Reconnect page has the following format for SCSI drives:

	7	6	5	4	3	2	1	0
0	PS (0)	Rsvd (0)	Page Code {02h}					
1	Additional Page Length {0Eh}							
2	Buffer Full Ratio (0)							
3	Buffer Empty Ratio (0)							
4	(MSB)	Bus Inactivity Limit (0)						
5								(LSB)
6	(MSB)	Disconnect Time Limit [0]						
7								(LSB)
8	(MSB)	Connect Time Limit (0)						
9								(LSB)
10	(MSB)	Maximum Burst Size [0]						
11								(LSB)
12	Reserved (0)						DTDC (0)	
13–15	Reserved (0)							

Disconnect-Reconnect page fields

Buffer Full Ratio	0	Buffer management is controlled by the drive, so this should always be zero.
Connect Time Limit	0	Buffer management is controlled by the drive, so this should always be zero.
Bus Inactivity Limit	0	This parameter is not supported and should be zero.
Disconnect Time Limit	0	This parameter is not supported and should be zero.
Connect Time Limit	0	This parameter is not supported and should be zero.
Maximum Burst Size	>0	The maximum amount of data that will be transferred during a data-in or data-out phase before disconnecting. This field is in units of 512 bytes. The maximum burst size that the drive supports is 127 (7Fh) blocks of 512 bytes, that is, 64 KB less 512 bytes.
	0	The drive may send bursts of any size. This is the default value.
DTDC	0	The Data Transfer Disconnect Control field is not supported and should be zero.

NOTE: If the host does not grant disconnect privilege in its IDENTIFY message these parameters become meaningless. The drive will stay connected on the bus for the duration of an operation or until the host sends a mid-operation IDENTIFY granting disconnect privilege.

SAS drives

The Disconnect-Reconnect page has the following format for SAS drives:

	7	6	5	4	3	2	1	0
0	PS (0)	Rsvd (0)	Page Code {02h}					
1	Additional Page Length {0Eh}							
2–3	Reserved (0)							
4	(MSB)	Bus Inactivity Time Limit [1]						
5								(LSB)
6–7	Reserved (0)							
8	(MSB)	Maximum Connect Time Limit [0]						
9								(LSB)
10	(MSB)	Maximum Burst Size [0]						
11								(LSB)
12–13	Reserved (0)							
14	(MSB)	First Burst Size (0)						
15								(LSB)

Disconnect-Reconnect page fields

Bus Inactivity Time Limit	The maximum time, in 100 µS units, the drive will keep a SSP connection open without transmitting a SSP frame.	
	0	The connection will be kept open indefinitely.
Maximum Connect Time Limit	The maximum time, in 100 µS units, the drive will keep a SSP connection open	
	0	There is no time limit.
Maximum Burst Size	The maximum amount of data, in 512 byte units, that will be transferred by the drive in a single SSP connection.	
	0	The drive will determine the maximum amount of data to transfer in a single connection.
First Burst Size	0	This feature is not supported and must be left at 0.

Control mode page

The Control mode page is defined as follows:

	7	6	5	4	3	2	1	0
0	PS (0)	Rsvd (0)	Page Code {0Ah}					
1	Page Length {0Ah}							
2	TST (0)			TMF only (0)	Rsvd (0)	D_SENSE	GLTSD(0)	RECL (0)
3	Queue Algorithm Modifier (0)				Rsvd (0)	QERR (0)		Obsolete
4	Rsvd (0)	RAC [0]	UA Interlock Cntrl(0)		SWP (0)	Obsolete		
5	ATO (0)	TAS (1)	Reserved (0)			Autoload Mode		
6–7	Obsolete							
8	(MSB)	Busy Timeout Period (0)						
9								(LSB)
10	(MSB)	Extended Self-Test Completion Timeout (0)						
11								(LSB)

Control mode page fields

D_SENSE	0	Descriptor format sense data will be returned in auto-sense sense data.
	1	Fixed format sense data will be returned in the auto-sense sense data.
TST	*Task Set Type*	
	0	For SCSI drives.
	1	For other drives.
Autoload Mode	0	If a cartridge is inserted, the drive pulls it in and threads the tape.
	1 *or* 2	When a cartridge is inserted, the drive pulls it in but does *not* thread the tape. In this position, only the Cartridge Memory is accessible.
	All other values are invalid.	

Control Extension sub-page

	7	6	5	4	3	2	1	0
0	PS (0)	SPF (1)	Page Code {0Ah}					
1	Sub-page Code (01h)							
2	(MSB)	Page Length (1Ch)						
3								(LSB)
4	Reserved (0)					TCMOS (1)	SCSIP (0)	IALUAE (1)
5	Reserved (0)				Initial Priority (0)			
6–31	Reserved (0)							

TCMOS	*Timestamp Changeable by Methods Outside T10 Standards*
SCSIP	*SCSI Precedence*
IALUAE	*Implicit Asymmetric Logical Unit Access Enabled*

Data Compression Characteristics page

The Data Compression Characteristics mode page is defined as follows:

	7	6	5	4	3	2	1	0
0	Page Code {0Fh}							
1	Page Length {0Eh}							
2	DCE [1]	DCC (1)	Reserved (0)					
3	DDE (1)	RED (0)	Reserved (0)					
4	(MSB)	Compression Algorithm (1)						
7								(LSB)
8	(MSB)	Decompression Algorithm (1)						
11								(LSB)
12	Reserved (0)							
15								

Data Compression Characteristics mode page fields

DCE	*Data Compression Enable.* This bit controls whether the drive uses compression when writing. The value has no meaning when reading, that is, if the tape contains compressed data, decompression will occur regardless of the setting of this bit. The bit is analogous to the Select Data Compression Algorithm field on the Device Configuration mode page (see page 105).	
	0	Compression is disabled
	1	Compression is enabled

DCC	*Data Compression Capable* Read only. It will have the value of 1, indicating that compression is supported.
DDE	*Data Decompression Enable* Read only. It will have the value of 1, indicating that compression is enabled.
RED	*Report Exception on Decompression* Read only. It will have the value 0, meaning that the drive returns CHECK CONDITION status when it encounters data that cannot be decompressed. This applies when data has been compressed with an unknown or unsupported compression algorithm.
Compression Algorithm	This indicates which compression algorithm will be used to process data from the host when the DCE bit is set to one. If the host selects an algorithm which the drive does not support, CHECK CONDITION is returned, with a sense key of ILLEGAL REQUEST. Only the default algorithm (ID 1) is supported.
Decompression Algorithm	This will also always be 1, indicating that the default decompression algorithm should be used.

Device Configuration page

The drive supports the Device Configuration page, which has the following format:

	7	6	5	4	3	2	1	0
0	PS (0)	Rsvd (0)	Page Code {10h}					
1	Additional Page Length {0Eh}							
2	Rsvd(0)	Obsolete	CAF (0)	Active Format (0)				
3	Active Partition (0)							
4	Write Buffer Full Ratio (0)							
5	Read Buffer Empty Ratio (0)							
6	(MSB)	Write Delay Time: 012Ch						
7								(LSB)
8	DBR (0)	BIS (1)	RSmk(0)	AVC (0)	SOCF (00)		RBO(0)	REW (0)
9	Gap Size (0)							
10	EOD Defined (000)			EEG (1)	SEW [0]	Reserved (0)		
11	(MSB)	Buffer Size at Early Warning (0)						
13								(LSB)
14	Select Data Compression Algorithm [1]							
15	Rsvd (0)	WTRE(0)	OIR	Rewind on Reset [0]		ASOCWP (0)	PERSWP (0)	PRMWP (0)

Pre-execution checks

The only check made when this page is sent in Mode Select data is Parameter List.

Changeable parameters

Write Delay Time	0	The drive will never flush buffered data to tape as a result of a time-out.
	>0	The time in 100 ms increments that the drive should wait with unwritten data in the buffer and no activity on the interface before forcing data to tape. The delay is timed from the completion of the preceding Write or Write Filemarks command. The default value is 12Ch, which translates to a write delay of 30s.
SEW	*Synchronize at Early Warning flag*	
	0	Do not synchronize at Early Warning (default)
	1	Synchronize at Early Warning
Select Data Compression Algorithm	0	Use Scheme 2 of the LTO-DC algorithm (pass-through mode). *Note that clearing this parameter is not advised.*
	1	Use the default compression scheme. This is the default.
WTRE	WORM Tamper Read Enable. Controls the behavior of the drive when reading WORM media if it appears that the integrity of the tape has been compromised by tampering. WTRE has no effect on reads of normal (non-WORM) media.	
	0	*Default:* If no tampering has been detected, data is returned as normal. If tampering has been detected, no data is returned in response to a READ command or after the position of tamper. CHECK CONDITION is returned with sense key of Medium Error and additional sense of 300Dh (WORM medium—integrity check failed). TapeAlert flag 3Bh (medium error—integrity check failed) is set. The Error Code field in the Error Usage page will be filled with the ASC/Q of 300Dh.
	1	Data is returned regardless of whether tampering has been detected on the WORM cartridge. The bit should only be set as a last resort where data recovery overrides concerns about WORM integrity.
Rewind on Reset	00b	A Logical Unit Reset does not alter the logical position.
	01b	A Logical Unit Reset will cause the tape to be rewound to BOT.
	10b	A Logical Unit Reset does not alter the logical position.
	11b	Reserved

Unchangeable parameters

PS	0	
CAF	0	The Change Active Format flag should be zero since changing formats is not supported.
Active Format	0	Changing formats is not supported.
Active Partition	0	Multiple partitions are not supported.
Write Buffer Full Ratio	0	Buffer management is done by the drive.
Read Buffer Empty Ratio	0	Buffer management is done by the drive.

DBR	0	The Data Buffer Recovery flag should be clear since this feature is not supported.
BIS	1	The Block Identifiers Supported flag should be set since block identifiers are supported.
Rsmk	0	The Report Set Marks flag should be clear since this feature is not supported.
AVC	0	The Automatic Velocity Control flag should be clear since velocity control is managed by the drive.
SOCF	0	The Stop On Consecutive Filemarks flag should be clear since this feature is not supported.
RBO	0	The Recover Buffer Order flag should be clear since this feature is not supported.
REW	0	The Report Early Warning on read flag should be clear since this feature is not supported.
Gap Size	0	There is no concept of inter-block gaps in the format.
EOC Defined	0	
EEG	0	The Enable EOD Generation flag should be set since EOD generation is always enabled.
Buffer Size at Early Warning	0	The Buffer Size at Early Warning field should be zero as this cannot be set.

Medium Partitions mode page

The Medium Partitions mode page has the following format. Note that none of the fields are changeable. The Partition Size will be patronized.

	7	6	5	4	3	2	1	0
0	Page Code (11h)							
1	Page Length (08h)							
2	Maximum Additional Partitions (0)							
3	Additional Partitions Defined (0)							
4	FDP (0)	SDP (0)	IDP (0)	PSUM (11b)		POFM (0)	CLEAR (0)	ADDP (0)
5	Medium Format Recognition (3)							
6	Reserved (0)				Partition Units (9)			
7	Reserved (0)							
8	(MSB)	Partition Size						
9								(LSB)

None of the fields in this mode page are changeable.

Maximum Additional Partitions	0	Zero is returned, indicating that no additional partitions are present or supported.
Additional Partitions Defined	0	Zero must be returned, indicating that no additional partitions are present or supported.
FDP	0	The Fixed Data Partitions bit is not supported and must be set to zero.
SDP	0	The Select Data Partitions bit is not supported and must be set to zero.
IDP	0	The Initiator Defined Partitions bit is not supported and must be set to zero.
POFM	0	The Partitions on Format bit is set to zero since the drive does not support the FORMAT MEDIUM command through which the tape could be partitioned.
CLEAR	0	Set to zero indicating SCSI-2 compatibility.
ADDP	0	Set to zero indicating SCSI-2 compatibility.
Medium Format recognition	3	This indicates that the drive is capable of format and partition recognition.
PSUM	3	Partition Size Unit of Measure: The value of 11b indicates that the units of measure for the Partition Size descriptor are defined by the Partitions Units field: $10^{(\text{Partition Units})}$ bytes.
Partition Units	9	This defines the units of the Partition Size field as 10^9 bytes, in other words in gigabytes.
Partition Size	The Partition Size field will be updated following successful execution of the Set Capacity command. The maximum values are:	
	200	LTO 2 tape loaded
	400	LTO 3 tape loaded
	800	Default value. No data cartridge present or LTO 4 tape loaded.

Protocol-Specific Logical Unit mode page *(FC drives)*

	7	6	5	4	3	2	1	0
0	PS (0)	Rsvd (0)	Page Code {18h}					
1	Page Length {06h)							
2	Reserved (0)							
3	Reserved (0)							EPDC[1]
4–7	Reserved (0)							

EPDC	0	The target does not use the precise delivery function and ignores the contents of the CRN field in the Fibre Channel Extended Link Service `FCP_CNTL`. HP LTO Ultrium drives support this feature by default.
	1	The logical unit uses the precise delivery function defined in the FCP-2 standard. It makes use of the CRN field.

Protocol-Specific Logical Unit mode page *(SCSI drives)*

	7	6	5	4	3	2	1	0
0	PS (0)	Rsvd (0)	Page Code {18h}					
1	Page Length {06h)							
2	Reserved (0)				Protocol Identifier (1h)			
3–7	Reserved (0)							

Protocol Identifier	1	The protocol to which this mode page applies is SCSI.

Protocol-Specific Logical Unit mode page *(SAS drives)*

	7	6	5	4	3	2	1	0
0	PS (0)	SPF (0)	Page Code (18h)					
1	Page Length {06h)							
2	Reserved (0)			TLR (0)	Protocol Identifier (6h)			
3–7	Reserved (0)							

TLR	*Transport Layer Retries*	
	0	Transport layer retries are disabled.
	1	The target port supports transport layer retries for XFER_RDY and DATA frames for the logical unit.
Protocol Identifier	6	The protocol to which this mode page applies is SAS.

Protocol-Specific Port mode page *(FC drives)*

For FC drives, the Protocol-Specific Port Control page allows you to set the initialization and addressing behavior of the Fibre Channel interface.

	7	6	5	4	3	2	1	0
0	PS (0)	Rsvd (0)	Page Code {19h}					
1	Page Length {06h)							
2	Reserved (0)				Protocol Identifier (FCP=0)			
3	DTFD (0)	PLPB(0)	DDIS(0)	DLM(1)	RHA(0)	ALWLI(0)	DTIPE(0)	DTOLI(0)

	7	6	5	4	3	2	1	0
4	Reserved (0)							
5								
6	Reserved (0)					RR_TOV Units (3)		
7	Resource Recovery Time-Out Value—RR_TOV (F0h, that is, 24s)							

DTFD	*Disable Target Fabric Discovery.* If the drive is not attached to an arbitrated loop, the DTFD bit is ignored.	
	0	When attached by an arbitrated loop, the drive will discover a fabric loop port if one is present on the loop and perform public loop functions.
	1	When attached by an arbitrated loop, the drive will not recognize the presence of a fabric loop port on the loop. The drive performs only the private loop functions.
PLPB	*Prevent Loop Port Bypass*	
	0	The drive allows the Loop Port Bypass (LPB) and Loop Port Enable (PBE) primitive sequences to control the port bypass circuit.
	1	The drive ignores any Loop Port Bypass (LPB) and Loop Port Enable (LPE) primitive sequences. The loop port remains enabled. When the PLPB bit is zero, the drive allows the LPB and PBE primitive sequences to control the port bypass circuit. **NOTE:** If the PLPB bit is set to 1, the DTIPE bit must be set to 0.
DDIS	*Disable Discovery*	
	0	The drive must wait to receive an Address Discovery Link Service (ADISC) or Port Discovery Link Service (PDISC) before it resumes processing tasks for the initiator.
	1	The drive does not require receipt of Address or Port Discovery following loop initialization. The drive resumes processing of tasks on completion of loop initialization.
DLM	*Disable Loop Master.*	
	0	The drive may become loop master during the loop initialization process.
	1	The drive will never attempt to be a loop master; it only repeats LISM frames it receives. This allows the initiator to be loop master during loop initialization.

RHA	*Require Hard Address.* If the drive is not attached to an arbitrated loop, the RHA bit is ignored.	
	0	The drive follows the normal initialization procedure, including the possibility of obtaining a soft address during the loop initialization process.
	1	When attached to an arbitrated loop, the drive will only attempt to obtain its hard address (available via the device address jumpers) during loop initialization. The drive will not attempt to obtain an address during the LISA phase of initialization. If there is a conflict for the hard address selection during loop initialization or it does not have a valid hard address available, the drive will enter the non-participating state. If the drive detects loop initialization while in the non-participating state, it will again attempt to get its hard address. If the hard address has not changed from the address obtained in a previous successful loop initialization, the drive will attempt to obtain the address in the LIFA phase if a valid Fabric Login exists or in the LIPA phase of loop initialization. If the hard address has changed, the target will attempt to obtain the new address in the LIHA phase.
ALWLI	*Allow Login Without Loop Initialization*	
	0	The drive is required to verify its address through the loop initialization process before a login is accepted.
	1	The drive uses the hard address available in the SCA connector or device address jumpers and accepts logins without verifying the address with loop initialization.
DTIPE	*Disable Target Initiated Port Enable*	
	0	The drive enables its port into the loop without waiting for a Loop Port Enable primitive.
	1	The drive waits for an initiator to send the Loop Port Enable primitive before inserting itself into the loop. The drive uses the hard address available in the SCA connector or device address jumpers to determine if primitives are addressed to it. A Loop Port Enable primitive with the broadcast address will also cause the drive to insert itself into the loop. **NOTE:** If the DTIPE bit is set to 1, the PLPB bit must be set to 0.
DTOLI	*Disable Target Originated Loop Initialization*	
	0	The drive generates the Initializing LIP after it enables a port into a loop.
	1	The drive does not generate the Initializing LIP following insertion into a loop. It will respond to an Initializing LIP when it is received. It will generate the Loop Failure LIP at its input and the Initializing LIP when the loop failure is corrected.

RR_TOV Units	*Resource Recovery Time-Out Value Unit.* The field specifies the unit of measure as follows:	
	000b	No timer specified
	001b	0.001s
	011b	0.1s, units used by HP LTO Ultrium drives

	101b	10s
RR_TOV	The number of time units specified by the RR_TOV Units field that are used by the timer that performs the RR_TOV time-out functions.	
	F0h	240 x 0.1s units = 24 seconds

Protocol-Specific Port mode page *(SCSI drives)*

Normal page *(SCSI drives)*

If the Port Control mode page (19h) is requested via the MODE SENSE command with the Sub-Page code set to zero, the following data will be returned

	7	6	5	4	3	2	1	0
0	PS (0)	SPF(0)	Page Code {19h}					
1	Page Length {06h)							
2	Reserved (0)				Protocol Identifier (1h)			
3	Reserved (0)							
4	Synchronous Transfer Timeout (0)							
5								
6–7	Reserved (0)							

Protocol Identifier	1	The protocol to which this mode page applies is SPI SCSI.
Synchronous Transfer Timeout	0	Synchronous Transfer Timeout is disabled.

Sub-pages *(SCSI drives)*

	7	6	5	4	3	2	1	0
0	PS (0)	SPF(0)	Page Code {19h}					
1	Subpage Code							
2	Page Length (*n*-3)							
3								
4	Reserved (0)							
5	Reserved (0)				Protocol Identifier (01h)			
6	Protocol-Specific Mode Parameters							
n								

The following sub-pages are supported:

- Margin Control (01h) — static data
- Saved Training Configuration Values (02h) — static data
- Negotiated Settings (03h) — dynamic data

- Report Transfer Capabilities (04h) — static data

Sub-page 01h *(SCSI drives)*—Margin Control

	7	6	5	4	3	2	1	0
0	Reserved (0)							
1	Driver Strength (0)				Reserved (0)			
2	Driver Asymmetry (0)				Drive Precompensation (1h)			
3	Driver Slew Rate (0)				Reserved (0)			
4–6	Reserved (0)							
7	Vendor Specific (0)							
8–15	Reserved (0)							

None of the fields are supported on this page, so they should all be zero.

Sub-page 02h *(SCSI drives)*—Saved Training Configuration Values

	7	6	5	4	3	2	1	0
0–3	Reserved (0)							
4	DB(0) Value (0)							
7								
:					:			
64	DB(15) Value (0)							
67								
68	P_CRCA Value (0)							
71								
72	P1 Value (0)							
75								
76	BSY Value (0)							
79								
80	SEL Value (0)							
83								
84	RST Value (0)							
87								
88	REQ Value (0)							
91								
92	ACK Value (0)							
95								

	7	6	5	4	3	2	1	0
96 99	ATN Value (0)							
100 103	C/D Value (0)							
104 107	I/O Value (0)							
108 111	MSG Value (0)							
112 227	Reserved (0)							

All the fields on this page are vendor-specific. None are supported, so they should all be zero.

Sub-page 03h *(SCSI drives)*—Negotiated Settings

	7	6	5	4	3	2	1	0
0	Transfer Period Factor							
1	Reserved (0)							
2	Req/Ack Offset							
3	Transfer Width Exponent							
4	Protocol Options Bits							
5	Reserved (0)				Transceiver Mode		Sent PCOMP_EN	Received PCOMP_EN
6 7	Reserved (0)							

Protocol Options Bits

The negotiated protocol options:

Bit	Protocol Option	Meaning	Supported	Bit
7	PCOMP_EN	Precompensation	Yes	7
6	RTI	Retain training information	Yes	6
5	RD_STRM	Read streaming and read flow control	No	5
4	WR_FLOW	Write flow control	No	4
3	HOLD_MCS	Hold margin control	No	3
2	QAS_REQ	Quick arbitration and selection	No	2
1	DT_REQ	Double transition clocking	Yes	1
0	IU_REQ	Information units	Yes	0

Transceiver Mode	The current bus mode:	
	Code	**Bus Mode**
	00b	Unknown
	01b	SE
	10b	LVD
	11b	HVD (This will never be reported since the drive will not operate on an HVD bus)
Sent PCOMP_EN	The value of the PCOMP_EN bit sent. This will be set if PCOMP_EN has been negotiated successfully.	
Received PCOMP_EN	The value of the PCOMP_EN bit received. This will be set if PCOMP_EN has been negotiated successfully.	

Sub-page 04h *(SCSI drives)*—Report Transfer Capabilities

	7	6	5	4	3	2	1	0
0	Minimum Transfer Period Factor (08h)							
1	Reserved (0)							
2	Maximum Req-Ack Offset (40h)							
3	Maximum transfer Width Exponent (1)							
4	Protocol Option Bits Supported (C3h)							
5	Reserved (0)							
7								

Minimum Transfer Period Factor	08h	The smallest value of the transfer period factor supported. For LTO 4 SCSI, this is 8, in other words, FAST-160 (Ultra320).
Maximum Req/Ack Offset	40h	The maximum value for the Req/Ack offset. This is 64 (40h).
Maximum Transfer Width Exponent	1	The maximum width supported. This is 1, indicating that wide transfers are supported.
Protocol Option Bits Supported	C3h	The protocol options supported. The value of C3h indicates that PCOMP_EN, RTI, DT_REQ and IU_REQ are supported and RD_STRM, WR_FLOW, HOLD_MCS and QAS_REQ are not. See the Protocol Options Bits field on sub-page 03h (Negotiated Settings) on page 114 for details of the bits.
Protocol Option Bits Supported	02h	The protocol options supported. The value of 02h indicates that only DT_REQ is supported. See the Protocol Options Bits field on sub-page 03h (Negotiated Settings) on page 114 for details of the bits.

Protocol-Specific Port mode page *(SAS drives)*

Short format

	7	6	5	4	3	2	1	0
0	PS (0)	SPF (0)	Page Code (19h)					
1	Page Length (06h)							
2	Reserved (0)			Ready LED Meaning (0)	Protocol Identifier (6h)			
3	Reserved (0)							
4	I_T Nexus Loss Time [07 D0h]							
5								
6–7	Initiator Response Timeout [03 E8h]							

I_T Nexus Loss Time	The time for which the target port will retry connection requests to an initiator port that are rejected with responses indicating the initiator port may no longer be present before recognizing an I_T nexus loss. Values are as follows:	
	0000h	Vendor specific amount of time
	0001h–FFFEh	Time in milliseconds. The default value of 07D0h falls within this range, so the drive will retry request for 2 seconds, that is, 07D0h(2000) milliseconds.
	FFFFh	Retry requests forever.
Initiator Response Timeout	The time in milliseconds for which the drive will wait for an initiator to starting sending write data frames after it has acknowledged a XFER_RDY frame, before aborting the command associated with this transfer. A value of zero means that the drive will wait forever.	

PHY Control and Discover sub-page *(SAS drives only)*

The sub-page consists of a page header followed by zero, one or two PHY mode descriptors.

	7	6	5	4	3	2	1	0
0	PS (0)	SPF (1)	Page Code (19h)					
1	Sub-Page Code (01h)							
2	Page Length (n-3)							
3								
4	Reserved (0)							
5	Reserved (0)				Protocol Identifier (6h)			
6	Reserved (0)							
7	Number of PHYs							

SAS PHY Mode Descriptors

8	First SAS Mode Descriptor
55	
56	Second SAS Mode Descriptor
103	

Number of PHYs	The number of SAS Mode Descriptors that follow the header. Valid values are 0, 1 or 2.

Each SAS mode descriptor is defined as follows:

	7	6	5	4	3	2	1	0
0	Reserved (0)							
1	PHY Identifier							

	7	6	5	4	3	2	1	0
2– 3	Reserved (0)							
4	Rsvd (0)	Attached Device Type			Reserved (0)			
5	Reserved (0)				Negotiated Physical Link Rate			
6	Reserved (0)				Attached SSP Initiator Port	Attached STP Initiator Port	Attached SMP Initiator Port	Rsvd (0)
7	Reserved (0)				Attached SSP Target Port	Attached STP Target Port	Attached SMP Target Port	Rsvd (0)
8	(MSB)	SAS Address						
15								(LSB)
16	(MSB)	Attached SAS Address						
23								(LSB)
24	Attached PHY Identifier							
25–31	Reserved (0)							
32	Programmed Min Phys. Link Rate [8h]				Hardware Min Physical Link Rate (8h)			
33	Programmed Max Phys. Link Rate [9h]				Hardware Max Physical Link Rate (9h)			
34–41	Reserved (0)							
42	(MSB)	Vendor Specific [0000h]						
43								(LSB)
44–47	Reserved (0)							

PHY Identifier	Associates this SAS Mode Descriptor with a particular PHY within the tape drive.	
Attached Device Type	The type of SAS device connected to this PHY:	
	000b	No device
	001b	End device
	010b	Edge expander device
	011b	Fanout expander device
	110b–111b	Reserved

Negotiated Physical Link Rate	The link rate negotiated during the last link reset. This may be less than the Programmed Minimum Physical Link Rate or greater than the Programmed Maximum Physical Link Rate if they have been changed since the last link reset. Values appropriate for this device are as follows:		
	Field Value	**Name**	**Description**
	0h	UNKNOWN	PHY is enabled. Unknown physical link rate.
	1h	DISABLED	PHY is disabled.
	8h	G1	PHY is enabled—1.5 Gb/s.
	9h	G2	PHY is enabled—3.0 Gb/s.
Attached SSP/STP/SMP Initiator Port	1	The attached PHY is capable behaving as a SSP/STP/SMP initiator.	
SAS Address	The WWN of this PHY.		
Attached SAS Address	The WWN of the PHY connected to this PHY.		
Attached PHY Identifier	The PHY identifier for the attached PHY.		
Programmed Minimum Physical Link Rate	The minimum link rate that will be negotiated for during the next link reset sequence.		
Programmed Maximum Physical Link Rate	The maximum link rate that will be negotiated for during the next link reset sequence.		

Power Condition mode page

The Power Condition mode page controls the power condition transitions (idle or standby) of a logical unit:

	7	6	5	4	3	2	1	0
0	PS (0)	SPF (0)	Page Code {1Ah}					
1	page Length {0Ah)							
2	Reserved (0)							
3	Reserved (0)						Idle (0)	Standby (0)
4	(MSB)	Idle Condition Timer						
7								(LSB)
8	(MSB)	Standby Condition Timer						
11								(LSB)

The Idle and Standby bits are not changeable. Because both are set to 0, the Timers are ignored.

Information Exceptions mode page

The Information Exceptions mode page is used to control exception reporting through the "Requested Recovery log page" on page 85:

	7	6	5	4	3	2	1	0
0	PS (0)	Rsvd (0)	Page Code {1Ch}					
1	Page Length {0Ah)							
2	Perf (0)	Reserved (0)			DExcpt	Test	Rsvd (0)	LogErr (0)
3	Reserved (0)				MRIE (3h)			
4	(MSB)	Interval Timer (0)						
7								(LSB)
8	(MSB)	Report Count/Test Flag Number						
11								(LSB)

Perf	0	Informational exception operations that cause delays are acceptable.
DExcpt	*Disable Exception Control*	
	0	Information exception operations (such as TapeAlert flags being activated, depending on the value of the TASER bit in the Device Configuration Extension mode page) are enabled. The reporting of information exception conditions is determined from the MRIE field.
	1	Default. A DExcpt bit of one indicates the target will disable all information exception operations. The method of reporting informational exceptions field is ignored when DExcpt is set to one. The **Test** bit must not be set at the same time.
Test	0	If the Test flag is clear the next command will be processed normally.
	1	A test bit of one will generate false informational exception conditions. As a result, the next SCSI command after the Mode Select will return CHECK CONDITION with a sense key of RECOVERED ERROR and additional sense of 5DFFh (failure prediction threshold exceeded - false). The **DExcpt** bit must not be set at the same time.
	The Test bit will never be read as 1 when performing a Mode Sense command. This is not an indication that the drive is in test mode. For example, using the Test bit and Test Flag Number, it may be possible to set a flag with the DExcpt bit set to 1. When the DExcpt bit is next set, the drive will report CHECK CONDITION with a sense key of RECOVERED ERROR and additional sense of 5DFFh (failure prediction threshold exceeded - false). In order to set the DExcpt bit again, note that the Test bit must still be set during the Mode Select command.	
LogErr	0	*Log Errors bit.* This bit must be zero, indicating that the logging of informational exception conditions within the drive is vendor-specific.

MRIE	*Method of Reporting Informational Exceptions*		
	3h	This field indicates the method used by the target to report informational exception conditions and must be set to 3. The target will report informational exception conditions by returning a CHECK CONDITION status on any command. The sense key will be set to RECOVERED ERROR with additional sense of 5D00h (failure prediction threshold exceeded). The command that has the CHECK CONDITION will complete without error before any informational exception condition may be reported.	
Interval Timer	0	Must be zero, indicating that the drive only reports an informational exception condition once.	
Report Count/Test Flag Number	0	If the Test bit is also zero, there is *no* limit on the number of times the drive can report an informational exception condition. Treat this case with *caution*; only a hard reset or power-cycle will clear this condition.	
	n	If the **Test** bit is zero, this field is the Report Count, and indicates the number of times the device server will report an informational exception condition (subject to the **DExcpt** bit). If the **Test** bit is one, this field is the Test Flag Number, that is, the number of a supported TapeAlert flag. The target will generate a test informational exception condition. As a result, the next SCSI command after MODE SELECT will return CHECK CONDITION with a sense key of RECOVERED ERROR and additional sense of 5DFFh (failure prediction threshold exceeded - false). The following are valid settings:	
		1 *through* 64	This sets the TapeAlert flag with this number in the Log page.
		–1 *through* –64 (FFFFFFFFh–FFFFFFC0h)	This clears the TapeAlert flag indicated by the absolute value of the Test Flag Number.
		32767 (7FFFFh)	This sets all the TapeAlert flags supported by the target in the Log page.

Note that if an attempt is made to set or clear a flag that is not supported by the drive, CHECK CONDITION will be reported with a sense key of ILLEGAL REQUEST and additional sense of 2600h (invalid field in parameter list).

Medium Configuration mode page

The Medium Configuration mode page is used to to specify special restrictions when the device server is processing commands that access the tape.:

	7	6	5	4	3	2	1	0
0	PS (0)	SBF (0)	Page Code (1Dh)					
1	Page Length (1Eh)							
2	Reserved (0)							WORMM
3	Reserved (0)							
4	WORM Mode Label Restrictions (01h)							

	7	6	5	4	3	2	1	0
5	WORM Mode Filemark Restrictions (01h)							
6–31	Reserved (0)							

WORMM	WORM Mode is set to 1 when there is a WORM tape loaded in the drive. Default is 0. Not changeable by a MODE SELECT command.	
WORM Mode Label Restrictions	01h	The device server does not allow some types of format labels to be overwritten.
WORM Mode FileMark Restrictions	02h	The device server allows any number of filemarks immediately preceding EOD to be overwritten except the filemark closest to BOP.

Serial Number Override vendor-unique mode page

NOTE: This page is not available on all variants.

The Serial Number Override mode page provides a means to override the drive's serial number. The page is support by the SSC/RMC Device (Logical Unit 0), and so is accessible via ACI/ADI and the primary port. This provides a common method for changing the drive serial number.

	7	6	5	4	3	2	1	0
0	PS (0)	SBF (0)	Page Code (3Bh)					
1	Page Length (0Eh)							
2	Reserved (0)						MSN	
3–5	Reserved (0)							
6	(MSB)	Serial Number						
15								(LSB)

		MODE SENSE	MODE SELECT
MSN	00b	Not reported	This is a NO-OP. The drive's serial number remains unchanged and the Serial Number field is ignored.
	01b	The Serial Number field contains the Drive Serial Number being used by the drive and it is the manufacturer's default value.	Sets the Drive Serial Number back to the manufacturer's default value. The Serial Number field is ignored
	10b	Not reported	Same as 00b
	11b	The Serial Number field contains the Drive Serial Number being used by the drive and it is not the default value.	The Drive Serial number will be set to the value supplied in the Serial Number field.
Serial Number	An ASCII serial number. MODE SELECT data will be check to ensure that this field contains only ASCII values in the range 20h–7Fh.		

The Mode Page policy for this page is shared amongst all initiators on all ports, so if the Drive Serial number is modified via MODE SELECT, all initiators, apart from the issuer of the MODE SELECT command, on all ports will received UNIT ATTENTION—Mode Parameters Changed.

Similarly, the VPD inquiry pages 80h (Unit Serial Number) and 83h (Device Identification) supported by the SSC/RMC device (LUN 0) will return the same Drive Serial number regardless of which port the INQUIRY command is issued.

For example, if the Drive Serial number is modified using an ACI MODE SELECT command, subsequent INQUIRY commands for pages 80h or 83h issued via the primary port or ADT port will report the same modified serial number.

Device Time mode page

The Device Time mode page consists of the following page header followed by three Timebase descriptors:

	7	6	5	4	3	2	1	0
0	PS (0)	SBF (0)	Page Code (3Ch)					
1	Page Length (22h)							
2	Reserved (0)					LT	WT	PT
3	Reserved (0)							

Power-on time descriptor

	7	6	5	4	3	2	1	0
4	Timebase Identifier (00h)							
5	Timebase Field Length (06h)							

	7	6	5	4	3	2	1	0
6	(MSB)	Current Power-on Count						
7								(LSB)
8	(MSB)	Power-on Time						
11								(LSB)

World time descriptor

	7	6	5	4	3	2	1	0
12	Timebase Identifier (01h)							
13	Timebase Field Length (06h)							
14	Reserved (0)						UTC	NTP
15	Reserved (0)							
16	(MSB)	World Time						
11								(LSB)

Library time descriptor

	7	6	5	4	3	2	1	0
20	Timebase Identifier (10h)							
21	Timebase Field Length (06h)							
22	Reserved (0)							
23	Library Time (hrs)							
24	Library Time (mins)							
25	Library Time (secs)							
26–27	Reserved (0)							

Cumulative power-on time descriptor

	7	6	5	4	3	2	1	0
28	Timebase Identifier (18h)							
29	Timebase Field Length (06h)							
30–31	Reserved (0)							
32	(MSB)	Cumulative Power-on Time						
35								(LSB)

Field descriptions

	MODE SENSE		MODE SELECT
LT	0	Library time is invalid	1 to set Library time (ignored if the target port is not ADT)
	1	Library time is valid	
WT	0	World time is invalid	1 to set World time
	1	World time is valid	
PT	0	Power-on time is invalid	Ignored
	1	Power-on time is valid	
Current Power-on Count	The number of times the drive has been powered on		Ignored
Power-on Time	The number of seconds since the drive has been powered on		Ignored
UTC	0	The local timezone has been used.	Ignored if WT is 0 Set to 1 if UTC World time is being used
	1h	World time is UTC	
NTP	0	Unsure if NTP-synced	Ignored if WT is 0 Set to 1 if World time is NTP-synced
	1h	World time is set from NTP source	
World Time	The number of seconds from 00:00:00 on January 1, 1970		Ignored if WT = 0
Library Time	The time in hrs:mins:secs set by the library controller		Ignored if the target port is not ADT
Cumulative Power-on Time	The number of seconds since the drive was powered on for the very first time		Ignored

Extended Reset vendor-unique mode page

The Extended Reset page is required for any variant that will need Tru64 connectivity

	7	6	5	4	3	2	1	0
0	Page Code {3Dh}							
1	Page Length {02h}							
2	Reserved (0)						Reset Behavior	
3	Reserved (0)							

Reset Behavior	Controls the behavior of the drive when it detects a SCSI Bus reset or Bus Device Reset message.	
	00b	Normal reset behavior (this is the default value).
	01b	The drive will flush and position itself at BOT upon: • *FC drives:* a Logical Unit Reset or Target Reset. • *SCSI drives:* a SCSI Bus reset or Bus Device Reset message. • *SAS drives:* a Logical Unit Reset.
	10b	No automatic flush. Logical position is maintained.
	11b	Reserved

CD-ROM Emulation/Disaster Recovery mode page

This page can be used irrespective of whether the drive is acting as a tape or a CD device.

	7	6	5	4	3	2	1	0
0	Page Code {3Eh}							
1	Page Length {02h}							
2	Reserved (0)						Non-Auto	CDmode
3	Reserved (0)							

CD-ROM Emulation/Disaster Recovery mode page fields

Non-Auto	When a system restarts after booting off tape, the drive detects the SCSI resets issued during reboot and, in conjunction with knowing that more than 100 blocks have been read in CD-ROM emulation mode, will revert back to behaving as a tape device. This is the standard method by which the drive automatically reverts to being a tape drive in order that a backup application can do file system recovery. The method of reversion involves a firmware reboot, so the drive might become unavailable for a few seconds during its “power-on” following the SCSI reset. (Note that normal SCSI reset response does not involve a firmware reboot). Setting this flag to 1 inhibits this automatic return to tape drive behavior; the drive will remain in CD-ROM mode irrespective of blocks read and SCSI resets.

CDmode	*MODE SENSE*	0	The drive is in tape drive mode.
		1	The drive is in CD-ROM emulation mode.
	MODE SELECT	This flag can be used to switch the drive between normal operation and CD-ROM emulation mode: • If this bit is set to its existing value, there is no change. • If this bit is changed from 0 to 1, the drive will enter CD-emulation mode. It will change its Inquiry and Mode data appropriately and cache the first 250 KB of the CD image off tape. CD-ROM support commands will be enabled. This transition is primarily present to support automated functional testing.If the bit is changed from 1 to 0, the drive leaves CD-ROM emulation mode and reverts to normal tape drive mode. • If this bit is changed from 1 to 0, the drive will leave CD-emulation mode. The Inquiry and Mode data will revert to that for a tape drive and CD-ROM command support will stop. The tape will be reloaded and the logical position will be BOP. Backup applications can use this transition to switch to a normal mode of operation for file system recovery off tape. Note that operating systems that pre-load class drivers at boot might not be prepared to talk to the erstwhile CD-ROM drive	

MODE SENSE 1Ah/5Ah

MODE SENSE allows the drive to return its current configuration and report which configuration parameters can be changed through MODE SELECT.

The mode sense header, block descriptor (optional), and zero or more of the are sent to the host. Mode pages contain drive configuration parameters. Some of these parameters are fixed, others are configurable (through the MODE SELECT command). The host should use MODE SENSE to determine which drive parameters are configurable and what their current values are before using mode select to alter them.

NOTE: See MODE SELECT on page 93 for full descriptions of the Mode Parameters. If a MODE SENSE command is issued whilst an immediate reported Load command is executing or close to completing then the values of some parameters in some mode pages which depend on the results of the load may be undefined.
Similarly, the write-protect field in the Mode Parameter Header will be unstable unless a cartridge is present and medium removal is prevented.

Pre-execution checks

Illegal Field Reservation Deferred Error Unit Attention

The page code field must contain a valid mode page code or the value 0 or the value 3Fh. If it does not then CHECK CONDITION status is reported. Sense data will be as described in the Illegal Field Checks.

Command descriptor block

6-Byte Version

	7	6	5	4	3	2	1	0
0	Operation Code (1Ah)							
1	Reserved (0)				DBD	Reserved (0)		
2	PC		Page Code					
3	Sub Page Code							
4	Allocation Length							
5	Control							

10-byte version

	7	6	5	4	3	2	1	0
0	Operation Code (5Ah)							
1	Reserved (0)				DBD	Reserved (0)		
2	PC		Page Code					
3	Sub Page Code							

	7	6	5	4	3	2	1	0
4	Reserved (0)							
6								
7	(MSB)	Allocation Length						
8								(LSB)
9	Control							

CDB fields

DBD	*Disable Block Descriptors flag*		
	0	Allows the drive to return the MODE SELECT block descriptor.	
	1	Prevents the drive from returning the MODE SELECT block descriptor.	
PC	*Page Control*—Indicates the type of page parameter values to be returned to the host, as shown in the following table:		
	7	**6**	**Description**
	0	0	*Report Current Values:* the current values of the parameters are returned.
	0	1	*Report Changeable Values:* the page returned has its non-changeable parameter fields cleared to 0. The fields that are changeable are set to all 1's.
	1	0/1	*Report Default Values:* the page returned contains the power-on/reset/bus-device-reset values of the mode parameters.
Page Code	This allows the host to select any specific page, or all the pages supported by the drive.		
	0	The drive returns no mode pages, so only the header and block descriptor are returned.	
	Any mode page code	The drive returns that page.	
	3Fh	The drive returns all mode pages.	
Sub Page Code	The sub-page code of the page code for data to be returned. If there are no sub-pages, it should be set to 0.		
Allocation Length	Specifies the number of bytes that the host has allocated for returned MODE SENSE data.		
	0	No data transfer will occur. This is not considered an error.	
	n	The maximum number of bytes which the drive should return in its data-out phase. Either the entire mode page or allocation length bytes of the page are returned, whichever is least.	

PERSISTENT RESERVE IN 5Eh

PERSISTENT RESERVE IN is used to obtain information about persistent reservations and reservation keys that are active within a tape drive logical unit.

Pre-execution checks

Illegal Field Reservation Deferred Error Unit Attention

Command descriptor block

	7	6	5	4	3	2	1	0
0	Operation Code (5Eh)							
1	Reserved (0)			Service Action				
2	Reserved (0)							
6								
7	(MSB)	Allocation Length						
8								(LSB)
9	Control							

CDB fields

Service Action	The service action types that are supported are:		
	00h	Read Keys	Returns all registered reservation keys
	01h	Read Reservation	Returns information on any current persistent reservation
	02h	Report Capabilities	Returns details of the persistent reservation features supported
	03h	Report Full Status	Returns registration and reservation status for each registered I_T nexus.
Allocation Length	The maximum amount of data (in bytes) that should be returned to the host. The drive will return all of the requested information or allocation length bytes, whichever is least.		

Returned data for service actions:

Read Keys service action

The drive will return a parameter list containing an 8-byte header and list of the reservation keys for each currently registered I_T nexus. Each key is 8 bytes long. The format of the returned data is as follows:

	7	6	5	4	3	2	1	0
0	(MSB)	PR Generation						
3								(LSB)
4	Additional Length (*n*-7)							
7								

	7	6	5	4	3	2	1	0
8 15	First Reservation Key							
:	:							
n-7 n	Last Reservation Key							

PR Generation	A 32-bit counter that is maintained by the drive and incremented every time a PERSISTENT RESERVE OUT command requests a Register, Register and Ignore Existing Key, Clear, Preempt, or Preempt and Abort service action.

Read Reservation service action

The drive returns a parameter list containing an 8-byte header and the persistent reservation, if any, that is present in the drive. If no persistent reservation is present, Additional Length is 0 and no reservation data is returned. If a persistent reservation is present, Additional Length is 10h and 16 bytes of reservation data are returned as follows:

	7	6	5	4	3	2	1	0
0	(MSB)	PR Generation						
3								(LSB)
4 7	Additional Length (0 or10h)							
8 15	Reservation Key							
17 19	Obsolete (0)							
20	Reserved (0)							
21	Scope (0)				Type			
22 23	Obsolete (0)							

PR Generation	As for "Read Keys service action" on page 130.	
Reservation Key	The key under which the persistent reservation is held.	
Scope	0	Indicates LU_SCOPE.

Type	The characteristics of the persistent reservation currently held. Persistent reservation types supported by the drive are:	
	3h 6h 8h	Exclusive access Exclusive access, registrants only Exclusive access, all registrants
	See PERSISTENT RESERVE OUT for more information and also the appropriate standards.	

Report Capabilities service action

This provides a mechanism for the drive to report which features of Persistent Reservation are implemented. The format of the data returned is as follows:

	7	6	5	4	3	2	1	0
0	(MSB)	Length (0008h)						
1								(LSB)
2	Reserved (0)			CRH (1)	SIP_C (1)	ATP_C(0)	Rsvd (0)	PTPL_C (1)
3	TMV (1)	Reserved (0)						PTPL_A
4	WR_EX_AR (0)	EX_AC_RO (1)	WR_EX_RO (0)	Rsvd (0)	EX_AC (1)	Rsvd (0)	WE_EXC (0)	Rsvd (0)
5	Reserved (0)							EX_AC_AR(1)
6	Reserved (0)							
7								

PTPL_A	0	Persist Through Power Loss has not been activated
	1	The most recent successfully completed PERSISTENT RESERVE OUT command with *Register or Register and Ignore Existing Key* service action had the APTPL bit set to one in the parameter data.

All the other fields are fixed. Refer to the description of PERSISTENT RESERVE OUT or the appropriate standards for more information.

Report Full Status service action

This provides a mechanism for the drive to report a description of the registration and persistent reservation status of each currently registered I_T nexus. The format of the data returned is as follows:

	7	6	5	4	3	2	1	0
0	(MSB)	PR Generation						
3								(LSB)
4	(MSB)	Additional Length (*n*–7)						
7								(LSB)

	7	6	5	4	3	2	1	0
:					:			
...	Last Full Status Descriptor							
n								

The format of a Full Status descriptor is as follows:

	7	6	5	4	3	2	1	0
0	(MSB)	Reservation Key						
7								(LSB)
8	Reserved (0)							
11								
12							ALL_TG_PT(0)	R_Holder
13	Scope (0)				Type			
14	Reserved (0)							
17								
18	Relative Target Port Identifier							
19								
20	Additional Descriptor Length (*n*–23)							
23								
24	Transport ID							
n								

R_Holder	1	The I_T nexus is a Persistent Reservation holder.
Transport ID	See details in PERSISTENT RESERVE OUT.	

PERSISTENT RESERVE OUT 5Fh

PERSISTENT RESERVE OUT is used to request service actions that create a persistent reservation in a logical unit within the tape drive for the exclusive or shared use of a particular I_T nexus. The command uses other service actions to manage and remove such persistent reservations.

An I_T nexus performing Persistent Reserve Out service actions is identified by a reservation key.

Pre-execution checks

Illegal Field Reservation Deferred Error Unit Attention

Command descriptor block

	7	6	5	4	3	2	1	0
0	Operation Code (5Fh)							
1	Reserved (0)			Service Action				
2	Scope				Type			
3	Reserved (0)							
6								
7	Parameter List Length							
8								
9	Control							

CDB fields

Service Action	00b	Register	Registers or unregisters a reservation key with the device server.
	01b	Reserve	Creates the persistent reservation.
	02b	Release	Releases the persistent reservation.
	03h	Clear	Clears all reservation keys and the persistent reservation.
	04h	Preempt	Pre-empts the persistent reservation and/or remove registrations.
	05h	Preempt and Abort	Pre-empts the persistent reservation and/or remove registrations, and aborts all tasks for all pre-empted I_T nexuses.
	06h	Register and Ignore Existing Key	Registers or unregisters a reservation key with the device server.
	07h	Register and Move	Registers a reservation key for another T_T nexus and moves the persistent reservation to that I_T nexus
Scope	0	Indicates LU_SCOPE.	

Type	The characteristics of the persistent reservation currently held. Persistent reservation types supported by the drive are: 3h Exclusive access 6h Exclusive access, registrants only 8h Exclusive access, all registrants
Parameter List Length	The amount of data (in bytes) that should be sent to the drive from the host in parameter list data. If the SPEC_I_PT bit in the parameter data is 0, this field is set to 18h. If SPEC_I_PT is 1, this field specifies the number of bytes of parameter data (minimum is 18h).

Parameter data

NOTE: The Register and Move service action has its own specific Register and Move parameter data—see page 137.

	7	6	5	4	3	2	1	0
0	(MSB)	Reservation Key						
7								(LSB)
8	(MSB)	Service Action Reservation Key						
15								(LSB)
16	Obsolete (0)							
19								
20	Reserved (0)				SPEC_I_PT	ALL_TG_PT	Rsvd(0)	APTPL
21	Reserved (0)							
22	Obsolete (0)							
23								
24	(MSB)	Additional Parameter Data						
n								(LSB)

Reservation Key	Identifies the I_T nexus that sent the command. The value must match the registered reservation key for the I_T nexus except for: • The *Register and Ignore Existing Key* service action, where this field is ignored. • The *Register* service action for an unregistered I_T nexus, where this field is 0. If the Reservation Key does not match with the one registered in the device server for the I_T nexus, the device server returns Reservation Conflict.

Service Action Reservation Key	Information needed for the following service actions: *Register, Register and Ignore Existing Key, Preempt,* and *Preempt and Abort.* For the *Register* and *Register and Ignore Existing Key* service actions:	
	0	Unregisters the registered reservation key specified in the Reservation Key field.
	n	The new reservation key to replace the existing one as specified in the Reservation Key field for the I_T nexus.
	For the *Preempt* and *Preempt and Abort* service actions, this field contains:	
	n	The reservation key of registrations to be removed or, if this field also identifies a persistent reservation holder, the persistent reservation to be pre-empted.
	For the *Register and Move* service action, this field contains:	
	n	The reservation key to be registered on the specified I_T nexus.
SPEC_I_PT	Valid only for the *Register* and *Register and Ignore Existing Key* service actions.	
	0	The Additional Parameter Data is ignored and the registration is applied only to the I_T nexus that sent the command.
	1	The Additional Parameter Data includes a list of transport IDs and the device server applies the registration to the I_T nexus for every initiator port specified in the transport list.
ALL_TG_PT	Not supported and ignored.	
APTPL	Only valid for the *Register, Register and Ignore Existing Key* and *Register and Move* service actions.	
	1	The logical unit preserves any persistent reservation and all registrations if power is lost and later returned. If the EEPROM (non-volatile memory) is unable to store data anymore, the device server returns CHECK CONDITION.

This is a summary of the field validity in the parameter data:

Service Action	Scope	Type	Reservation Key	Service Actions Reservation Key	APTPL	SPEC_I_PT
Register	ignored	ignored	valid	valid	valid	valid
Register and Ignore Existing Key	ignored	ignored	ignored	valid	valid	invalid
Reserve	LU_SCOPE	valid	valid	ignored	ignored	ignored
Release	LU_SCOPE	valid	valid	ignored	ignored	ignored
Clear	ignored	ignored	valid	ignored	ignored	ignored
Preempt	LU_SCOPE	valid	valid	valid	ignored	ignored
Preempt and Abort	LU_SCOPE	valid	valid	valid	ignored	ignored
Register and Move	LU_SCOPE	valid	valid	valid	valid	n/a

Additional parameter data

	7	6	5	4	3	2	1	0
24	(MSB)	Transport Parameter Data Length (*n*-27)						
27								(LSB)

Transport IDs List

28	(MSB)	First Transport ID
:		(LSB)
	:	
:	(MSB)	Last Transport ID
n		(LSB)

Transport Parameter Data Length	Specifies the number of bytes of Transport IDs to follow. The Parameter List Length in the CDB contains all the bytes specified in Transport Parameter Data Length.
Transport IDs	See "Transport IDs" on page 138.

Parameter data for the Register and Move service action

	7	6	5	4	3	2	1	0
0	(MSB)	Reservation Key						
7								(LSB)
8	(MSB)	Service Action Reservation Key						
15								(LSB)
16	Reserved (0)							
17	Reserved (0)						Unreg	APTPL
18	Relative Port Identifier							
19								
20	Transport Parameter Data Length (18h)							
23								
24	(MSB)	Transport ID						
n								(LSB)

Unreg	1	The device server unregisters the I_T nexus on which the command was received.

Service Action Registration Key	*n*	The reservation key to be registered on the specified I_T nexus.
APTPL	1	The logical unit preserves any persistent reservation and all registrations if power is lost and later returned. If the EEPROM (non-volatile memory) is unable to store data anymore, the device server returns CHECK CONDITION.

Transport IDs

Fibre Channel Transport ID

	7	6	5	4	3	2	1	0
0	Format Code (00b)		Reserved (0)		Protocol Identifier (0)			
1	Reserved (0)							
7								
8	(MSB)	World Wide Port Name						
15								(LSB)
16	Reserved (0)							
23								

SCSI Transport ID

	7	6	5	4	3	2	1	0
0	Format Code (00b)		Reserved (0)		Protocol Identifier (1h)			
1	Reserved (0)							
2	(MSB)	SCSI Address						
3								(LSB)
4	(MSB)	Relative Port Identifier (0)						
7								(LSB)
8	Reserved (0)							
23								

SAS Transport ID

	7	6	5	4	3	2	1	0
0	Format Code (00b)		Reserved (0)		Protocol Identifier (6h)			
1–3	Reserved (0)							
4	(MSB)	SAS Address						
11								(LSB)

	7	6	5	4	3	2	1	0
12 23	Reserved (0)							

PREVENT/ALLOW MEDIUM REMOVAL 1Eh

PREVENT/ALLOW MEDIUM REMOVAL tells the drive to enable or disable the removal of the cartridge.

When cartridge removal is prevented, the front panel eject button is completely disabled (though a 'forced eject' will still work). An Unload command issued by a host will result in CHECK CONDITION. The sense key will be ILLEGAL REQUEST or MEDIUM REMOVAL PREVENTED.

When cartridge removal is enabled, pressing the front panel eject button or sending an Unload command from a host will cause the media to be unloaded and ejected.

Removal prevention is on a per-host basis. All the hosts have to allow media removal for any of them to do so.

NOTE: If a firmware upgrade is initiated over any interface, the cartridge will be ejected from the drive regardless of the state of this command.

Pre-execution checks

Illegal Field Reservation Deferred Error Unit Attention

Command descriptor block

	7	6	5	4	3	2	1	0
0	Operation Code (1Eh)							
1–3	Reserved (0)							
4	Reserved (0)						Prevent	
5	Control							

CDB fields

Prevent	00b	Medium removal is allowed for the drive
	01b	Media removal is prohibited for the drive
	10b, 11b	Invalid

READ 08h

READ transfers zero or more data blocks to the host starting at the current logical position.

Pre-execution checks

Illegal Field	Fixed Bit	Reservation	Deferred Error
Unit Attention	Media Access	Diagnostic Status	

If both the SILI and Fixed bits are set, CHECK CONDITION status is reported. Sense data is as described in the Illegal Field Checks. The field pointers indicate the Fixed bit field.

Command descriptor block

	7	6	5	4	3	2	1	0
0	Operation Code (08h)							
1	Reserved(0)						SILI	Fixed
2	(MSB)	Transfer Length						
4								(LSB)
5	Control							

CDB fields

If the Fixed flag is clear and Transfer Length is not zero, then a single block of the length in Transfer Length is to be transferred. If the next block on tape is of this length or shorter it is transferred to the initiator. If the next block is longer than this length, only the length requested is returned and the logical position is set to after the record. If the length of the block was the same as the Transfer Length field, GOOD status is returned. If the length of the block was not the same as in Transfer Length and the Suppress Illegal Length Indicator (SILI) flag was clear, Check Condition status is returned, ILI will be reported as described below. If the length of the block was not the same as in Transfer Length and the Suppress Illegal Length Indicator (SILI) flag was set, Good status is returned.

If the fixed flag is set and the Transfer Length field is not zero and the Suppress Illegal Length Indicator (SILI) flag is clear, a sequence of blocks of the currently configured block length is to be returned, the number of blocks being indicated in the Transfer Length field. If there is a sequence of blocks of this length on the tape, they are returned to the initiator with GOOD status. If a block that is longer than the configured length is encountered before the sequence is complete, the blocks up to that block are returned followed by the configured length from the record that was too long and Check Condition status (ILI will be reported as described below). If a block that is shorter than the configured length is encountered before the sequence is complete, the blocks up to that block are returned followed by all of that block and Check Condition status (ILI will be reported as described below). The current position is set after the last block that was returned or partially returned

SILI	*Suppress Incorrect Length Indicator*	
	0	The read operation is terminated when the length of a block (on the tape) differs from the Transfer Length. Transfer Length bytes of data will have been transferred. The logical tape position will be the EOM side of the illegal sized block.
	1	The drive will not report CHECK CONDITION status if the only error is that the Transfer Length is not equal to the actual block length recorded on the media.
Fixed	0	The Transfer Length field specifies the length of the transfer in bytes. A single block of the length in Transfer Length is to be transferred. • If the next block on tape is of Transfer Length, it is transferred to the initiator and GOOD status is returned. • If the next block on tape is not of Transfer Length: • If it is shorter, the whole block is transferred to the initiator. • If it is longer, only the length requested is returned and the logical position is set to after the record. • If SILI = 0, CHECK CONDITION status is returned. ILI is reported as described below. • If SILI = 1, GOOD status is returned.
	1	The Transfer Length field specifies the length of the transfer in blocks. The size of each block (in bytes) is specified by the current block length specified in the Mode Parameter block descriptor. If SILI = 0, a sequence of blocks of the currently configured block length is to be returned, the number of blocks being indicated in the Transfer Length field. • If there is a sequence of blocks of this length on the tape, they are returned to the initiator with GOOD status. • If a block that is shorter than the configured length is encountered before the sequence is complete, the blocks up to that block are returned followed by all of that block and CHECK CONDITION status (ILI will be reported as described below). The current position is set after the last block that was returned. • If a block that is longer than the configured length is encountered before the sequence is complete, the blocks up to that block are returned followed by the configured length from the record that was too long and CHECK CONDITION status (ILI will be reported as described below). The current position is set after the last block that was partially returned.
Transfer Length	0	No data is transferred. This is not considered an error and the current logical position will be unchanged.
	>0	The amount of data to be transferred, in bytes or blocks as specified by the Fixed field.

Read specific status

Event	Status	Key	Notes
SILI error	CHECK COND'N	NO SENSE	ILI and Valid bits are set. The information bytes will be set as follows: *Variable Block Mode:* The difference between the requested Transfer Length and the actual block size. If the block size is bigger than the Transfer Length, this will be negative (twos complement). *Fixed Block Mode:* The difference between the requested number of records and the number of whole good records transferred. If the last record was under length, it is considered "whole good" for the purposes of this calculation.
Filemark encountered during a read	CHECK COND'N	NO SENSE	The Mark bit is set. Logical position will be on the EOM side of the filemark. Additional sense is 0001h (filemark detected). The logical position will be on the EOM side of the filemark. Residue information is as described below.
EOD encountered during a read	CHECK COND'N	BLANK CHECK	Additional sense is set to 0005h (EOD detected). Residue information is as described below.
EOP/M encountered during a read	CHECK COND'N	MEDIUM ERROR	The EOM bit is set. Additional sense is set to 0002h (EOP/M detected). Residue information is as described below.
Failure to read data through media error or non-fatal drive error	CHECK COND'N	MEDIUM ERROR	Additional sense is set to 1100h (unrecovered read error) or 3B00h (sequential positioning error). Residue information is as described below.
Corrupt data format	CHECK COND'N	MEDIUM ERROR	Additional sense set to 3002h (can't read media).
Blank media encountered during a read	CHECK COND'N	BLANK CHECK	Caused by an attempt to read an unformatted tape. Additional sense is set to 5000h (EOD not found). Residue information is as shown below.

NOTE: Early warning end of medium information is not reported on reads.

Residue information:

The Valid bit will be set. The information bytes will be as follows:

Variable Block Mode	The requested transfer length (in bytes).
Fixed Block Mode	The difference (in blocks) between the requested transfer size and the actual number of blocks transferred. A partially transferred block is not counted, so for example, if 3.5 out of 10 blocks have been transferred the residue will be 7. If the last block is an illegal length block, it is not counted among those transferred. For example, if 4 legal length blocks and 1 illegal length block have been transferred out of a total of 10, the residue will be 6.

READ 6 *(CD-ROM mode)* 08h

Transfer Length blocks of data are transferred to the host, starting from the current logical position specified by Logical Block Address. Any spacing performed to locate to the specified block address is performed with mark counting disabled.

Requests falling within the first 250 kilobytes of data on tape will be performed with very little delay (less than 2 seconds) because the drive caches this data at load time.

Pre-execution checks

Illegal Field	Fixed Bit	Flag Link
Bad LUN	Reservation	Deferred Error
Unit Attention	Media Access	Diagnostic Status

Command descriptor block

	7	6	5	4	3	2	1	0
0	Operation Code (08h)							
1	(MSB)	Logical Block Address						
3								(LSB)
4	Transfer Length							
5	Control							

CDB fields

Logical Block Address	Specifies the block address from which to read. The tape drive will space to this block before reading data.
Transfer Length	The number of blocks of data to return. Each CD-ROM block is 2048 bytes in size. This size is automatically set in the mode data's fixed block length while in CD-ROM mode.

Read 6 specific status

See the "Read specific status" on page 143.

Residue information

See the "Residue information:" on page 144 for the normal Read command.

READ 10 *(CD-ROM mode)* 28h

Transfer Length blocks of data are transferred to the host, starting from the current logical position specified by Logical Block Address. Any spacing performed to locate to the specified block address is performed with mark counting disabled.

Requests falling within the first 250 kilobytes of data on tape will be performed with very little delay (less than 2 seconds) because the drive caches this data at load time.

Pre-execution checks

Illegal Field	Fixed Bit	Flag Link
Bad LUN	Reservation	Deferred Error
Unit Attention	Media Access	Diagnostic Status

Command descriptor block

	7	6	5	4	3	2	1	0
0	Operation Code (28h)							
1	Logical Unit Number			DPO (0)	FUA (0)	Reserved (0)		RelAdr(0)
2	(MSB)	Logical Block Address						
5								(LSB)
6	Reserved (0)							
7	(MSB)	Transfer Length						
8								(LSB)
9	Control							

CDB fields

Logical Block Address	Specifies the block address from which to read. The tape drive will space to this block before reading data.
Transfer Length	The number of blocks of data to return. Each CD-ROM block is 2048 bytes in size. This size is automatically set in the mode data's fixed block length while in CD-ROM mode.

Read 10 specific status

See the "Read specific status" on page 143.

Residue information:

See the "Residue information:" on page 144 for the normal Read command.

READ ATTRIBUTE 8Ch

The READ ATTRIBUTE command allows an application client to read attribute values to MAM (Medium Auxiliary Memory). It should be executed before sending a WRITE ATTRIBUTE command.

Pre-execution checks

Illegal Field Deferred Error Unit Attention Media Access

In order to execute a READ ATTRIBUTE command, there must be a cartridge in the drive, even if it is only partially loaded, so that the MAM can be read.

Command descriptor block

	7	6	5	4	3	2	1	0
0	Operation Code (8Ch)							
1	Reserved (0)			Service Action				
2–4	Reserved (0)							
5	Volume Number (0)							
6	Reserved (0)							
7	Partition Number (0)							
8	(MSB)	First Attribute ID						
9								(LSB)
10	(MSB)	Allocation Length						
13								(LSB)
14	Reserved (0)							
15	Control							

CDB fields

Service Action	Service actions are defined as follows. The data returned for each Service Action is described below.		
	Code	**Name**	**Description**
	00h	Attribute Values	Returns the attribute values.
	01h	Attribute List	Returns a list of attribute IDs that are available (both supported and existing IDs)
	02h	Volume List	Returns a list of known volume numbers. For LTO Ultrium drives, there is only a single volume, Volume 0.
	03h	Partition List	Returns a list of known partition numbers. For LTO Ultrium drives, there is only a single partition, Partition 0.
	04h–1Fh	Reserved	

Element Address	Set to zero to indicate that Ultrium tapes only support a single element.
Element Type Code	Set to zero to indicate that Ultrium tapes only support a single element.
Volume Number	Set to zero to indicate that Ultrium tapes only support a single volume.
Partition Number	Set to zero to indicate that Ultrium tapes only support a single partition.
First Attribute ID	The identifier of the first attribute to be returned. This field is not checked if the Service Action value is 01h (Attribute List). If the attribute does not exist in MAM but there are more attributes available after it, the data returned will contain the values of those attributes. Otherwise CHECK CONDITION is returned with ILLEGAL REQUEST sense.
Allocation Length	The maximum amount of data (in bytes) that will be returned to the host. The drive will return the entire list of values or Allocation Length bytes, whichever is the lesser.

Returned data for service actions:

Attribute Values service action

This service reads the values of attributes for the specified volume and partition, starting at the First Attribute ID. The attributes are returned in ascending numerical order. The format of the returned data is as follows:

	7	6	5	4	3	2	1	0
0	(MSB)							
3				Available Data (*n*–3)				(LSB)
4								
a				Attribute ID 1				
:					**:**			
m								
n				Attribute ID *x*				

The Available Data field contains the number of bytes of attribute values returned. Even if the data returned has to be truncated because the Allocation Length is too small, the contents of the Available Data field remain the same.

For details of the available attributes and the format of the data returned for each, see "MAM attribute data" on page 150.

Attribute List service action

This service action is used to retrieve the identifiers of all the attributes that are supported and exist. The First Attribute ID field in the CDB is ignored. The attribute identifiers are returned in ascending numerical order. The format of the returned data is as follows:

	7	6	5	4	3	2	1	0
0	(MSB)	Available Data (*n*–3)						
3								(LSB)
4	Attribute ID 1							
a								
:	:							
m	Attribute ID *x*							
n								

The Available Data field specifies the number of bytes of attribute ID data returned. Even if the data returned has to be truncated because the Allocation Length is too small, the contents of the Available Data field remain the same.

A two-byte Attribute ID is returned for each attribute available on MAM. See "Attribute ID values" on page 151 for a description of the Attribute ID values.

Partition List service action

The Partition List service action is used to report the number of partitions supported in the specified volume, which in the case of LTO Ultrium drives is 1. The Partition Number and Attribute fields in the CDB are ignored. The information returned is as follows:

	7	6	5	4	3	2	1	0
0	(MSB)	Available Data (2)						
1								(LSB)
2	First Partition Number (0)							
3	Number of Partitions Available (1)							

The First Partition Number is the first partition available on the specified volume. Since LTO Ultrium drives do not support multiple partitions, this is 0.

The Number of Partitions Available indicates the number of partitions available on the specified volume. Since LTO Ultrium drives do not support multiple partitions, this is 1.

Volume List service action

The Volume List service action is used to report the number of volumes that the device server supports, which in the case of LTO Ultrium drives is 1. The Volume Number, Partition Number and Attribute fields in the CDB are ignored. The information returned is as follows:

	7	6	5	4	3	2	1	0
0	(MSB)	Available Data (2)						
1								(LSB)
2	First Volume Number (0)							
3	Number of Volumes Available (1)							

The First Partition Number is the first volume. Since LTO Ultrium drives do not support multiple volumes, this is 0.

The Number of Volumes Available indicates the number of partitions available. Since LTO Ultrium drives do not support multiple volumes, this is 1.

Read Attribute specific status

The command will be terminated and will return CHECK CONDITION under the following circumstances:

Description	Sense Key	Additional Sense	
There is no cartridge present in the drive, not even partially loaded.	NOT READY	3A00h	(medium not present)
The MAM has failed (for example from a bad checksum).	MEDIUM ERROR	1112h	(MAM read error)
The combination of Volume Number and Partition Number is not valid.	ILLEGAL REQUEST	2400h	(invalid field in CDB)
The Service Action field does not match a supported Service Action ID.	ILLEGAL REQUEST	2400h	(invalid field in CDB)
The First Attribute ID field does not match a supported First Attribute ID.	ILLEGAL REQUEST	2400h	(invalid field in CDB)

MAM attribute data

Attribute data sent with a WRITE ATTRIBUTE command or returned in response to a READ ATTRIBUTE command has the following format:

	7	6	5	4	3	2	1	0
0	(MSB)	Attribute Identifier						
1								(LSB)
2	Read-Only	Reserved (0)					Format	
3	(MSB)	Attribute Length (*n*–4)						
4								(LSB)
5	(MSB)	Attribute Value						
n								(LSB)

The format implies nothing about the physical representation of the data in the Medium Auxiliary Memory.

Attribute Identifier	The binary identifier for a single attribute. See "Attribute ID values" on page 151 for a description of attribute ID values.

Read-Only	Specifies whether an attribute is read-only. The bit is ignored by the READ ATTRIBUTE command.	
	0	The attribute may be changed by the WRITE ATTRIBUTE command.
	1	The attribute cannot be changed by WRITE ATTRIBUTE.
Format	Specifies the data format of the attribute. The possible values are:	
	Value	**Description**
	00b	Binary. The attribute contains binary data.
	01b	ASCII. Attributes contain only graphic codes (code values 20h–7Eh). It must be left-aligned and contain 20h (ASCII space) in any unused bytes.
	10b	Text. The attribute contains textual data. The character set is as described in the Text Localization Identifier attribute in "Standard host type attributes" on page 154.
	11b	Reserved.
Attribute Length	The length in bytes of the Attribute Value field.	

Attribute ID values

Attributes can be Standard or Vendor-Unique. There are three groups of attributes: Device, Medium and Host attributes. Each group has a list of attributes, which characterize the group:

Attribute ID	Attribute Type	Standard/Vendor-Unique	Read-Only
0000h–03FFh	Device	Standard	Yes
0400h–07FFh	Medium	Standard	Yes
0800h–0BFFh	Host	Standard	No
0C00h–0FFFh	Device	Vendor-Unique	Yes
1000h–13FFh	Medium	Vendor-Unique	n/a
1400h–17FFh	Host	Vendor-Unique	No
1800h–FFFFh	Reserved		

WRITE ATTRIBUTES commands are only accepted for Host type attributes (either Standard or Vendor-Unique).

Trying to read or write Device or Medium type Vendor-Unique attributes will fail and CHECK CONDITION status is reported. Sense data will be as described in the Illegal Field Checks.

Standard device type attributes

ID	Attribute	Size (bytes)	Format
0000h	Remaining capacity in partition	8	Binary
0001h	Maximum capacity in partition	8	Binary
0002h	TapeAlert flags	8	Binary
0003h	Load count	8	Binary

ID	Attribute	Size (bytes)	Format
0004h	MAM space remaining	8	Binary
0005h	Assigning organization	8	ASCII
0006h	Formatted density code	1	Binary
0007h–0209h	Reserved		
020Ah	Device make/serial number at last load	40	ASCII
020Bh	Device make/serial number at load –1	40	ASCII
020Ch	Device make/serial number at load –2	40	ASCII
020Dh	Device make/serial number at load –3	40	ASCII
020Eh–021Fh	Reserved		
0220h	Total MB written in medium life	8	Binary
0221h	Total MB read in medium life	8	Binary
0222h	Total MB written in current/last load	8	Binary
0223h	Total MB read in current/last load	8	Binary
0224h	Position of first encrypted block	8	Binary
0225h–03FFh	Reserved		

Remaining capacity in partition ***and*** **Maximum capacity in partition**	Native capacities in MB, assuming no data compression.
TapeAlert flags	The bits specify flags that were set during the previous load. 1 bit per flag (MSB = flag 1, LSB = flag 64).
Load count	The number of times this tape has been fully loaded. It is never reset.
MAM space remaining	The space currently free in the MAM. The total MAM capacity is reported in the MAM Capacity attribute defined in "Standard medium type attributes" on page 153. Note that it may not always be possible to use all the free space in a given MAM implementation. Depending on the internal organization of the memory and the software that controls it, fragmentation issues may mean that certain attribute sizes might not be fully accommodated as the MAM nears its maximum capacity.
Assigning organization	The Vendor ID of the organization that will define attribute 0006h. It contains the string "`LTO-CVE`".
Formatted density code	The medium density code.

Device make/serial number at last load *and* Device make/serial number at load –*n*	These attributes provide a rolling history of the last four device servers in which the tape has been loaded. The format of the attributes is as follows:

	7	6	5	4	3	2	1	0
0	(MSB)		Vendor Identification					
7								(LSB)
8	(MSB)		Product Serial Number					
39								(LSB)

Vendor Identification	The same value as is returned in the SCSI INQUIRY command by the device server, padded with ASCII spaces (20h).
Product Serial Number	Vendor-assigned serial number, padded with ASCII spaces (20h).

Total MB written in medium life *and* Total MB read in medium life	The total number of data bytes written to or read from the tape (after any data compression has been applied) over the entire tape life. These figures are cumulative and will never be reset.
Total MB written in current/last load *and* Total MB read in current/last load	These are similar to the attributes above but apply to the current load (if the tape is currently loaded) or the last load (if the tape is currently unloaded). The device server should reset these attributes to zero when the tape is loaded.
Logical Position of First Encrypted Block	The logical address on tape of the first encrypted block on tape. If there are no encrypted blocks, the value is set to 0000 FFFF FFFF FFFFh.

Standard medium type attributes

ID	Attribute	Size (bytes)	Format	Description
0400h	Medium manufacturer	8	ASCII	The name of the manufacturer.
0401h	Medium serial number	8	ASCII	The serial number, left-aligned and padded with ASCII spaces (20h).
0402h	Medium length	4	Binary	The length of the tape in meters. A value of 0 means the length is undefined.
0403h	Medium width	4	Binary	127 The width of the tape in mm
0404h	Assigning organization	8	ASCII	Contains the string "`LTO-CVE`".
0405h	Medium density code	1	Binary	The tape density code.
0406h	Medium manufacturer date	8	ASCII	The date of manufacture in the format YYYYMMDD.
0407h	MAM capacity	8	Binary	The total capacity of the MAM, not its free space.

ID	Attribute	Size (bytes)	Format	Description	
0408h	Medium type	1	Binary	The type of tape:	
				0	Data cartridge
				1	Cleaning cartridge
				Other values are reserved.	
0409h	Medium type information	2	Binary	Only meaningful for a cleaning cartridge, where it gives the maximum number of cleaning cycles permitted.	
040Ah – 07FFh	Reserved				

Standard host type attributes

These only exist if they are initialized by an application:

ID	Attribute	Size (bytes)	Format	Description	
0800h	Application vendor	8	ASCII		
0801h	Application name	32	ASCII		
0802h	Application version	8	ASCII		
0803h	User medium text label	160	Text	The user level identifier for the tape.	
0804h	Data and time last written	12	ASCII	Format is YYYYMMDDHHMM (0–24 hours)	
0805h	Text localization identifier	1	Binary	Defines the character set for the attributes defined as “text”. See the table below.	
0806h	Barcode	32	ASCII	Allows an application server to store the contents of a barcode associated with the medium in the MAM. Format is YYYYMMDD.	
0807h	Owning host textual name	80	Text	The host server from which the User Medium Text Label originates.	
0808h	Media pool	160	Text	Indicates the media pool to which this tape belongs.	
0809h	Partition user text label*	16	ASCII	Identifier for the partition specified in the CDB.	
080Ah	Load/unload at partition*	1	Binary	0	The load or unload occurs at the beginning of the tape. This is the default setting if the attribute does not exist.
				1	Loads and unloads at the partition specified in the CDB are allowed

ID	Attribute	Size (bytes)	Format	Description
080Bh	Application format version	16	ASCII	
080Ch–BFFh	Reserved			

*0809h and 080Ah are optional for LTO drives because they only support a single partition.

Vendor-unique medium type attributes

Attribute ID	Name	Attribute Length	Format	Description
1000h	Unique Cartridge Identity *(not applicable to cleaning cartridges)*	28	Binary	*4 bytes:* LTO CM Serial Number *8 bytes:* Tape pancake identification field from the Manufacturer's Word *8 bytes:* Manufacturer's Name field from the Manufacturer's Word *4 bytes:* The LPOS value at LP1 (deduced from the tape, or extracted from the Initialisation Data page in the CM) *2 bytes:* Cartridge Type field from the Cartridge Manufacturer's Page in the LTO CM *2 bytes:* Reserved (set to zero)

Text localization indentifiers

The Text Localization Identifier defines the character set used for attributes with a text format:

ID	Format
00h	No code specified (ASCII)
01h	ISO/IEC 8859-1 (Europe, Latin America)
02h	ISO/IEC 8859-2 (Eastern Europe)
03h	ISO/IEC 8859-3 (SE Europe/miscellaneous)
04h	ISO/IEC 8859-4 (Scandinavia/Baltic)
05h	ISO/IEC 8859-5 (Cyrillic)
06h	ISO/IEC 8859-6 (Arabic)
07h	ISO/IEC 8859-7 (Greek)
08h	ISO/IEC 8859-8 (Hebrew)
09h	ISO/IEC 8859-9 (Latin 5)
0Ah	ISO/IEC 8859-10 (Latin 6)
0Bh–7Fh	Reserved

ID	Format
80h	ISO/IEC 10646 (Unicode)
81h	ISO/IEC 10646 -1, Amendment no. 2 (UTF-8)
82h–FFh	Reserved

READ BLOCK LIMITS 05h

READ BLOCK LIMITS tells the drive to return data defining the maximum block size that it can support. Note that this is the maximum supportable, not the fixed block size.

Pre-execution checks

Illegal Field Reservation Deferred Error Unit Attention

Command descriptor block

	7	6	5	4	3	2	1	0
0	Operation Code (05h)							
1–4	Reserved (0)							
5	Control							

Read Block Limits data

	7	6	5	4	3	2	1	0
0	00h							
1	(MSB)	Maximum Block Length (FFFFFFh)						
3								(LSB)
4	(MSB)	Minimum Block Length (0001h)						
5								(LSB)

READ BUFFER 3Ch

READ BUFFER reads data from the memory on the drive and sends it to the initiator. The value of the Mode field determines whether only the 4-byte descriptor is returned, only the data is returned, or whether both are returned.

Pre-execution checks

Illegal Field Reservation Deferred Error Unit Attention

If any of the following rules are broken then CHECK CONDITION status is reported. Sense data will be as described in Illegal Field Checks.

Command descriptor block

	7	6	5	4	3	2	1	0
0	Operation Code (3Ch)							
1	Reserved(0)			Mode				
2	Buffer ID							
3	(MSB)	Buffer Offset						
5								(LSB)
6	(MSB)	Allocation Length						
8								(LSB)
9	Control							

CDB fields

Mode	00000b	A 4-byte descriptor is returned, followed by (*Allocation Length* – 4) bytes of data.The data is read from the buffer identified by the Buffer ID, starting from offset zero in the buffer. The Buffer ID and Buffer Offset must both be 00h.
	00010b	The drive returns Allocation Length bytes of data which is read from the buffer identified by the Buffer ID, starting from Buffer Offset bytes from the start of the buffer. There are no restrictions on the value of Buffer ID and Buffer Offset, except that the Buffer Offset must be kept within the buffer size.
	00011b	The drive returns a 4-byte descriptor for the buffer identified by the Buffer ID field. Invalid buffer IDs will return a buffer descriptor of all zeros. The Buffer Offset field must be zero.
	01010b	The drive returns data from the Echo Buffer. The Buffer ID and Offset are ignored.
	01011b	The drive returns the Echo Buffer descriptor. The Buffer ID and Offset are ignored.

Buffer ID	The Buffer ID indicates which buffer is to be read. The buffers are defined as follows:				
	Buffer ID	**Memory Area**	**Category**	**Offset Boundary**	
	00h	Main buffer memory	RAM	4 byte	
	02h	FC burst buffer, *or* SCSI burst buffer	RAM RAM	512 bytes 4 bytes	
	10h	CM EEPROM	EEPROM	1 byte	
	11h	Mechanical EEPROM	EEPROM	1 byte	
	12h	Head assembly EEPROM	EEPROM	1 byte	
	13h	PCA EEPROM	EEPROM	1 byte	
	20h–27h	Main buffer segments 0–7	RAM	4 bytes each	*details below*
Buffer Offset	The Buffer Offset field may be set to any address in the buffer, but must obey the specified Offset Boundary.				
Allocation Length	The amount of data to return. Allocation Length + Buffer Offset must be within the buffer size.				

Memory sizes

Main Buffer Memory	Size: 128 MB, reported size FFFFFFh. Because the buffer is greater than 16 MB, additional buffer IDs have been defined to allow the buffer to be accessed in 16 MB segments. these are as follows:		
	Buffer ID	**Address**	
	20h	00000000h + Buffer Offset (same as Buffer ID 00h)	
	21h	01000000h + Buffer Offset (in other words, +16 MB)	
	22h	02000000h + Buffer Offset (in other words, +32 MB)	
	23h	03000000h + Buffer Offset (in other words, +48 MB)	
	24h	04000000h + Buffer Offset (in other words, +64 MB)	
	25h	05000000h + Buffer Offset (in other words, +80 MB)	
	26h	06000000h + Buffer Offset (in other words, +96 MB)	
	27h	07000000h + Buffer Offset (in other words, +112 MB)	
Processor Memory	Not all of the Processor Memory space is accessible. The following table shows valid address segments:		
	Segment Start Address	**Segment Size**	**Segment Description**
	100000h	100000h	External flash
	200000h	80000h	External SRAM (if fitted)
	380000h	80000h	Formatter ASIC
	400000h	40000h	Servo Controller ASIC
	FF8000h	7000h	Controller internal SRAM

SCSI Burst Buffer	3F8000h bytes
LTO-Cartridge Memory	Size = 8 KB
Mechanism EEPROM	Size = 8 KB
Head Assembly EEPROM	Size = 16 KB
PCA EEPROM	Size = 32 KB

Returned data:

The format of the 4-byte descriptor for Mode 00000b is as follows:

	7	6	5	4	3	2	1	0
0	Reserved (0)							
1	(MSB)	Buffer Capacity						
3								(LSB)

The format of the 4-byte descriptor for Mode 00011b is as follows:

	7	6	5	4	3	2	1	0
0	Buffer Offset Boundary							
1	(MSB)	Buffer Capacity						
3								(LSB)

The format of the 4-byte Echo buffer descriptor for Mode 01011b is as follows:

	7	6	5	4	3	2	1	0
0	Reserved (0)							EBOS (1)
1	(MSB)	Echo Buffer Size (1000h)						
3								(LSB)

READ CAPACITY *(CD-ROM mode)* 25h

READ capacity transfers Read Capacity data to the host.

Pre-execution checks

Illegal Field	Fixed Bit	Flag Link	Bad LUN
Reservation	Deferred Error	Unit Attention	

If the drive is not in CD-ROM mode, the request will return CHECK CONDITION status with a sense key Illegal Command.

Command descriptor block

	7	6	5	4	3	2	1	0
0	Operation Code (25h)							
1	Logical Unit Number			Reserved (0)				RelAdr(0)
2	(MSB)	Logical Block Address (0)						
5								(LSB)
6	Reserved (0)							
7	Reserved (0)							
8	Reserved (0)							PMI
9	Control							

CDB fields

Logical Block Address	This flag is ignored. It is recommended that it should be zero.
PMI	This flag is ignored. It is recommended that it should be zero.

Read Capacity data

The following data is always returned

	7	6	5	4	3	2	1	0
0	(MSB)	Returned Logical Block Address (0004B000h)						
3								(LSB)
4	(MSB)	Block Length in bytes (00000800h)						
7								(LSB)

READ LOGGED-IN HOST TABLE A3h (1Fh)

Description

The READ LOGGED-IN HOST TABLE command gives a device server visibility of all hosts currently logged in to the drive.

Pre-execution checks

Unit Attention Illegal Field Reservation Deferred Error

Command descriptor block

	7	6	5	4	3	2	1	0
0	Operation Code (A3h)							
1	Ignored			Service Action (1Fh)				
2	HP LTO VU MI Opcode (06h)							
3	Reserved (0)				Report Type			
4	Reserved (0)							
5								
6	(MSB)	Allocation Length						
9								(LSB)
10	Reserved (0)							
11	Control							

CDB fields

Report Type	Determines the contents of the returned data:	
	00h	Return a logged-in host descriptor for all hosts
	01h	Only return a descriptor for the host that issued this command
	02h–0Fh	Reserved
Allocation Length	The number of bytes allocated for the returned parameter data. The actual number returned will be the lesser of the length of the actual parameter list and the allocation length.	

Data returned

The format of the READ LOGGED-IN HOST TABLE parameter list is as follows:

	7	6	5	4	3	2	1	0
0	(MSB)	Parameter List Length						
3								(LSB)
4	Host Descriptor							
n								

Host Descriptors are defined as follows:

	7	6	5	4	3	2	1	0
0	World-Wide Node Name							
7								
8	World-Wide Port Name							
15								
16	Source ID							
19								
20	Port Log-In Time							
25								
26	Reserved (0)		ME	Reserved (0)			Port ID	
27	Host ID							

ME	If set to one, the information reported in this descriptor corresponds to the initiator that sent the command.	
Port ID	The drive's port identifier. The "host" whose descriptor is reported established communication with the drive on the PortID. Values can be 0 or 1 for drives with more that one host interface port. Value 0 is reported otherwise.	
	00	Port A
	01	Port B

READ MEDIA SERIAL NUMBER ABh (01h)

READ MEDIA SERIAL NUMBER provides a method for the host application to read the serial number of the cartridge currently loaded in the drive.

Pre-execution checks

Illegal Field Reservation Deferred Error Unit Attention Media Access

Command descriptor block

	7	6	5	4	3	2	1	0
0	Operation Code (ABh)							
1	Reserved(0)			Service Action (01h)				
2	Reserved (0)							
8								
6	(MSB)	Allocation Length						
9								(LSB)
10	Reserved(0)							
11	Control							

CDB fields

Allocation Length	The maximum amount of data (in bytes) to be returned to the host. The drive will return the entire serial number string or allocation length bytes, whichever is least.

If there is no cartridge in the drive, the command is terminated with CHECK CONDITION status. The sense key is set to NOT READY with additional sense of 3A00h (medium not present).

Returned data

The data returned depends on whether a barcode number has been stored in the LTO-CM using the WRITE ATTRIBUTE command. Storing this is the responsibility of the library controller or host application.

No barcode stored:

	7	6	5	4	3	2	1	0
0	(MSB)	Serial Number Length (0Ch)						
3								(LSB)
4	(MSB)	Cartridge Serial Number						
13								(LSB)
14	(MSB)	ASCII NUL characters (00h)						
15								(LSB)

Cartridge Serial Number	The serial number of 10 ASCII characters stored in the LTO-CM Cartridge Manufacturer's Information page.

Barcode stored:

	7	6	5	4	3	2	1	0
0	(MSB)	Serial Number Length (2Ch)						
3								(LSB)
4	(MSB)	Cartridge Serial Number						
13								(LSB)
14	(MSB)	ASCII Space characters (20h)						
15								(LSB)
16	(MSB)	Barcode Number						
47								(LSB)

Barcode Number	The barcode number of 32 ASCII characters stored in the LTO-CM Application Specific page.

READ POSITION 34h

The READ POSITION command returns data representing the current logical position to the host. The position is the count of all marks and blocks between BOM and the current logical position. The first block is block 0.

The command causes no tape movement.

The Read Position command is complimented by the LOCATE command.

Pre-execution checks

Illegal Field	Reservation	Deferred Error
Unit Attention	Media Access	Diagnostic Status

Command descriptor block

	7	6	5	4	3	2	1	0
0	Operation Code (34h)							
1	Reserved(0)			Service Action				
2	Reserved (0)							
6								
7	Allocation Length							
8								
9	Control							

CDB fields

Service Action	*The following values are supported:*	
	00h	Short Form Block ID
	06h	Long Form
	08h	Extended Form
Allocation Length	For Service Actions 00h and 06h, must be 0.	

Short Form Block ID

	7	6	5	4	3	2	1	0
0	BOP	EOP	LOCU (1)	BYCU (1)	Rsvd (0)	LOLU (0)	PERR	Rsvd (0)
1	Partition Number (0)							
2	Reserved (0)							
3								
4	(MSB)	First Block Location						
7								(LSB)

	7	6	5	4	3	2	1	0
8	(MSB)	Last Block Location *(same as First Block Location)*						
11								(LSB)
12	Reserved (0)							
13	(MSB)	Number of blocks in buffer (0)						
15								(LSB)
16	(MSB)	Number of bytes in buffer (0)						
19								(LSB)

Returned data fields

BOP	0	The current logical position is *not* at BOM (beginning of media).
	1	The current logical position is at BOM.
EOP	1	The current logical position is within the EW-EOM region.
LOCU	1	The number of blocks in the buffer is unknown.
BYCU	1	The number of bytes in the buffer is unknown.
LOLU	0	The Partition Number, First Block Location and Last Block Location fields are valid.
PERR	0	No position error
	1	There has been a position error caused by the overflow of some position field data.
Partition Number	This will always be zero.	
First Block Location	The number of blocks and filemarks from BOM to the current position. Counting starts at zero, so BOM is block location 0.	
Last Block Location	Always set to the value of the First Block Location.	

Long Block Form ID

	7	6	5	4	3	2	1	0
0	BOP	EOP	Reserved (0)		MPU	LONU (0)	Reserved (0)	
1	Reserved (0)							
3								
4	(MSB)	Partition Number (0)						
7								(LSB)
8	(MSB)	Block Number						
15								(LSB)
16	(MSB)	File Number						
23								(LSB)

	7	6	5	4	3	2	1	0
24	(MSB)	Set Number(0)						
31								(LSB)

Returned data fields

MPU	Mark Position Unknown	
	0	The File Number and Set Number fields are valid.
LONU	0	The Partition Number and Block Number are valid.
Partition Number	This will always be zero because LTO Ultrium drives do not support multiple partitions.	
Block Number	The number of logical blocks between BOP (beginning of partition) and the current logical position. Filemarks count as one logical block each.	
File Number	The number of filemarks between BOP and the current logical position.	
Set Number	The number of setmarks between BOP and the current logical position.	

Extended Block Form ID

	7	6	5	4	3	2	1	0
0	BOP	EOP	LOCU (1)	BYCU (1)	Rsvd (0)	LOLU (0)	Reserved (0)	
1	Partition Number (0)							
2	Additional Length (1Ch)							
3								
4	Reserved (0)							
5	(MSB)	Number of blocks in buffer (0)						
7								(LSB)
8	(MSB)	First Block Location						
15								(LSB)
16	(MSB)	Last Block Location (same as First Block Location)						
23								(LSB)
24	(MSB)	Number of bytes in buffer (0)						
31								(LSB)

READ TOC *(CD-ROM mode)* 43h

READ TOC transfers the Table of Contents data to the host.

Pre-execution checks

Illegal Field	Fixed Bit	Flag Link
Bad LUN	Reservation	Deferred Error
Unit Attention	Media Access	Diagnostic Status

If the drive is not in CD-ROM mode, the request will return CHECK CONDITION status with a sense key Illegal Command.

The Track/Session Number must be set to 0 or 1. Any other value will result in CHECK CONDITION status with sense data as described in Illegal Field Checks.

Command descriptor block

	7	6	5	4	3	2	1	0
0	Operation Code (43h)							
1	Logical Unit Number			Reserved (0)			MSF	RelAdr(0)
2	Reserved (0)				Format (0)			
3	(MSB)	Reserved (0)						
5								(LSB)
6	Track/Session Number							
7	(MSB)	Allocation Length						
8								(LSB)
9	Control							

CDB fields

MSF	This flag is ignored.
Track/Session Number	This may be set to 0 or 1. It does not affect the data returned.
Allocation Length	The maximum number of data bytes that may be returned.

Read TOC data

The following data is always returned

	7	6	5	4	3	2	1	0
0	(MSB)	TOC Data Length (12h)						
1								(LSB)
2	First Track Number (1)							

	7	6	5	4	3	2	1	0
3	Last Track Number (1)							
4	Reserved (0)							
5	ADR (1)				Control (4)			
6	Track Number (1)							
7	Reserved (0)							
8	(MSB)	Logical Block Address (00000000h)						
11								(LSB)
12	Reserved (0)							
13	ADR (1)				Control (4)			
14	Track Number (AAh)							
15	Reserved (0)							
16	(MSB)	Logical Block Address (0004B000h)						
19								(LSB)

RECEIVE DIAGNOSTICS RESULTS 1Ch

RECEIVE DIAGNOSTIC RESULTS tells the drive to return data from the last diagnostic test requested through the SEND DIAGNOSTIC command. If none has been sent, the data refers to the power-on self-test.

Pre-execution checks

Illegal Field Reservation Deferred Error Unit Attention

Command descriptor block

	7	6	5	4	3	2	1	0
0	Operation Code (1Ch)							
1	Reserved(0)							PCV
2	Page Code							
3	(MSB)	Allocation Length						
4								(LSB)
5	Control							

CDB fields

PCV	Page Code Valid flag. This must be set to 1.	
Page Code	0	Identifier for the diagnostic information page to be returned.
Allocation Length	0	No data will be returned. This is not considered an error. The drive will return allocation length bytes or the amount of data that is available, whichever is least.
	>0	The number of bytes which the host has allocated for returned diagnostic data.

Specific status

If the drive not is connected to a compatible enclosure, a RECEIVE DIAGNOSTIC command with a Enclosure Services page number (01 to 0F) will return a CHECK CONDITION with Sense key of NOT READY and additional sense of 3502h, “enclosure services unavailable”.

If other invalid pages are requested, CHECK CONDITION will result with status of ILLEGAL REQUEST and additional sense of 2601h, “parameter not supported”.

Data returned

Page code 70h — Self-Test (Read/Write)

Page Format for Write:

	7	6	5	4	3	2	1	0
0	Page Code (70h)							
1	Reserved (0)							

	7	6	5	4	3	2	1	0
2	(MSB)	Parameter List Length (0)						
3								(LSB)

No parameters are needed. Sending this page is equivalent to a Send Diagnostic command with both the SelfTest and UnitOfl bits set.

Page format for Read:

	7	6	5	4	3	2	1	0
0	Page Code (70h)							
1	Reserved (0)							
2	(MSB)	Parameter List Length (4)						
3								(LSB)
4	(MSB)	Error Code						
7								(LSB)

RELEASE UNIT 17h/57h

RELEASE UNIT enables the host to release any reservation it may have on the drive. Reserving a device is a way of ensuring exclusive access to that device from a single initiator for the period of the reservation. The drive may be reserved using a RESERVE command.The 10-byte RELEASE UNIT command is supported by all drives. Its functionality is the same as for the 6-byte command, but it also supports third-party reservation.

Pre-execution checks

Illegal Field Deferred Error Unit Attention

Command descriptor block

6-byte

	7	6	5	4	3	2	1	0
0	Operation Code (17h)							
1	Reserved (0)			3rd Pty	Third-Party Device ID			Rsvd(0)
2	Reserved (0)							
4								
5	Control							

3rdPty	This bit is always zero because third-party reservation is not supported.
Third-Party Device ID	This bit is always zero because third-party reservation is not supported.

10-byte

	7	6	5	4	3	2	1	0
0	Operation Code (57h)							
1	Reserved (0)			3rd Pty	Reserved (0)		LongID	Rsvd(0)
2	Reserved (0)							
3	Third-Party Device ID							
4	Reserved (0)							
6								
7	(MSB)	Parameter List Length						
8								(LSB)
9	Control							

10-byte only

3rd Pty	0	Third-party release is not requested.
	1	The initiator requests third-party release. The value in the Third-Party Device ID field is valid.
LongID	This is always zero because device IDs greater than 255 are not supported.	
Third-Party Device ID	This is required and used only when the 3rd Pty bit is set. The device will perform the release operation only if the initiator ID, the 3rd Pty bit and the Third-Party Device ID are identical to those in the RESERVE UNIT command that established the reservation. The drive ignores any attempt to release the reservation made by any other initiator, including the initiator for which the reservation was made. If an initiator reserved the drive using a third-party reservation over itself, a non-third-party RELEASE UNIT command could also release the reservation.	

Release Unit specific status

Status is returned as follows:

- If the drive is not reserved, GOOD status is reported.
- If the drive is reserved by another host, GOOD status is reported.
- If the drive is reserved by this host for this host, the reservation status is cleared.

REPORT DENSITY SUPPORT 44h

The Report Density Support command returns details about the tape formats supported by the drive.

The data is returned as a header and a series of density descriptor blocks or medium type descriptor blocks.

Pre-execution checks

Illegal Field Deferred Error Unit Attention

Command descriptor block

	7	6	5	4	3	2	1	0
0	Operation Code (44h)							
1	Reserved (0)						Medium Type	Media
2–6	Reserved (0)							
7	(MSB)	Allocation Length						
8								(LSB)
9	Control							

CDB fields

Medium Type	0	The drive reports density descriptor blocks.
	1	The drive reports medium type descriptor blocks.
Media	0	One descriptor block is returned for each format supported by the drive. The capacity field in the descriptor block will indicate the capacity of the current media.
	1	One descriptor block is returned with the data for the currently loaded tape. The capacity field will indicate the maximum for the format. If there is no tape inserted in the drive, the drive will return CHECK CONDITION with a sense key of NOT READY and additional sense of 3A 00h (medium not present).
Allocation Length	This specifies the maximum number of bytes which the drive should return in its data-out phase. Either the entire available data or allocation length bytes of the page are returned, whichever is least.	
	0	No data transfer will occur. This is not considered an error.

Header

	7	6	5	4	3	2	1	0
0	(MSB)	Available Density Descriptor Length						
1								(LSB)
2	Reserved (0)							
3	Reserved (0)							

The available length gives the total amount of data available to be returned.

Density descriptor blocks

If the Medium Type field is set to 1, the header is followed by one or more Density descriptor blocks with the following format:

	7	6	5	4	3	2	1	0
0	Primary Density Code							
1	Secondary Density Code							
2	WRTOK	DUP (0)	DEFLT	Reserved (0)				
3	Reserved (0)							
4	Reserved (0)							
5	(MSB)	Bits per mm						
7								(LSB)
8	(MSB)	Media Width						
9								(LSB)
10	(MSB)	Tracks						
11								(LSB)
12	(MSB)	Capacity (MB)						
15								(LSB)
16	(MSB)	Assigning Organization (`LTO-CVE`)						
23								(LSB)
24	(MSB)	Density Name						
31								(LSB)
32	(MSB)	Description						
51								(LSB)

The values reported for LTO 4 format tapes are as follows:

Primary Density Code	46h	This is reported via the MODE SENSE command.
Secondary Density Code	46h	Not used
WRTOK	The Write OK flag indicates whether the drive can write at the density indicated by the Density Code.	
	0	The drive does not support writing to a tape with this density.
	1	The drive is capable of writing at this density to the current tape (if the Media bit in the CDB = 1) or for some tape (if Media = 0).
DUP	The Duplicate flag will be set to zero for every descriptor block indicating that each density is only reported once.	

DEFLT	The Default flag will be set for the density for which the currently mounted medium is formatted and clear for all other densities.	
Bits per mm	12725	
Media Width	127	Tape width is 1/2″ or 12.65 mm. The value in this field is in tenths of millimeters rounded to the nearest 0.1 mm.
Tracks	896	
Capacity	800000 MB	The maximum capacity for the format (or the capacity of the media if the Media bit is set)
Assigning Organization	LTO-CVE	The CVE assigns these codes.
Density Name	U-416	The format of this is: `[U/A]-[Format Generation: 1,2...][No of Tracks: 4,8,16...]`
Description	Ultrium 4/16T	A longer version of the above

If this command is sent to the HP LTO Ultrium 4 drive with the Media bit set to 0, three descriptor blocks will be returned with key values as follows:

Density Code	WRTOK	DEFLT	Capacity
42h	1	0	30D40h
44h	1	0	61A80h
46h	1	1	C3500h

Medium Type descriptor blocks

If the Medium Type field is cleared to 0, the header is followed by one or more Medium Type descriptor blocks with the following format:

	7	6	5	4	3	2	1	0
0	Medium Type							
1	Reserved (0)							
2	(MSB)	Descriptor Length (34h)						
3								(LSB)
4	Number of Density Codes (01h)							
5	Primary Density Code							
6	Reserved (0)							
13								
14	(MSB)	Media Width						
15								(LSB)
16	(MSB)	Media Length						
17								(LSB)

	7	6	5	4	3	2	1	0
18	Reserved (0)							
19								
20	(MSB)	Assigning Organization						
27								(LSB)
28	(MSB)	Medium Type Name						
35								(LSB)
36	(MSB)	Description						
55								(LSB)

Medium Type	00h	The tape is a data tape.
	01h	The tape is WORM.
	80h	The drive is in CD-ROM mode.

For the other fields, values are returned as in the following table:

Field	LTO2	LTO3	LTO4	LTO3 WORM	LTO4 WORM
Medium Type	00h	00h	00h	01h	01h
Primary Density Support	42h	44h	46h	44h	46h
Media width (0.1 mm)	127	127	127	127	127
Medium Length (m)	609	680	820	680	820
Assigning Organization	HP	HP	HP	HP	HP
Medium Type Name	Data	Data	Data	WORM	WORM
Description	Ultrium 2 Data Tape	Ultrium 3 Data Tape	Ultrium 4 Data Tape	Ultrium 3 WORM Tape	Ultrium 4 WORM Tape

NOTE: If OBDR is supported, the CD-ROM Medium Type descriptors are the same as Data Medium Type descriptors but with the Medium Type field set to 80h.

REPORT DEVICE IDENTIFIER A3h (05h)

Description

The REPORT DEVICE IDENTIFIER command returns the identifier of the current device to the initiator.

Pre-execution checks

Illegal Field Reservation Deferred Error Unit Attention

Command descriptor block

	7	6	5	4	3	2	1	0
0	Operation Code (A3h)							
1	Reserved (0)			Service Action (05h)				
2	Reserved (0)							
5								
6	(MSB)	Allocation Length						
9								(LSB)
10	Reserved (0)							
11	Control							

CDB fields

Allocation Length	The number of bytes that have been allocated for the Device Identifier The actual number returned will be the lower of the stored Device Identifier length and the allocation length specified in this command.

Data returned

The returned Parameter Data is as follows:

	7	6	5	4	3	2	1	0
0	(MSB)	Identifier Length (*n*–3)						
3								(LSB)
4	Identifier							
n								

REPORT LUNS A0h

Description

The Report LUNS command allows the host to retrieve information about what logical units the drive supports. The standard drive only has a single LUN, whereas a drive operating within a library and communicating over ADI will have an additional LUN.

Pre-execution checks

Illegal Field

Command descriptor block

	7	6	5	4	3	2	1	0
0	Operation Code (A0h)							
1	Reserved (0)							
2	Select Report							
3	Reserved (0)							
5								
6	(MSB)	Allocation Length						
9								(LSB)
10	Reserved (0)							
12	Control							

CDB fields

Select Report	The type of logical unit address that will be reported. Allowable values:	
	00h/02h	Report all logical units accessible by the initiator through the address target port.
	01h	No logical unit descriptors are returned because there are no well-known logical units.
	03h–FFh	Reserved. CHECK CONDITION returned.
Allocation Length	Must be at least 16 bytes. If not, the drive will return CHECK CONDITION status and provide a sense key of ILLEGAL REQUEST and additional sense of 2400h (invalid field in CDB).	

Data returned

	7	6	5	4	3	2	1	0
0	(MSB)	LUN List Length (08h or 10h if the drive is operating within a library and communicating over ADI)						
3								(LSB)

	7	6	5	4	3	2	1	0
4	(MSB)							
7				Reserved (0)				(LSB)

List of LUNs

8	(MSB)							
15				LUN 0 (00 00 00 00 00 00 00 00h)				(LSB)

If the drive is operating within a library and communicating over ADI...

16	(MSB)							
23				LUN 1 (00 01 00 00 00 00 00 00h) [				(LSB)

REPORT SUPPORTED OPCODES A0h (0Ch)

Description

The REPORT SUPPORTED OPCODES command requests information on commands supported by logical unit that is addressed.

Pre-execution checks

Illegal Field Reservation Deferred Error

Command descriptor block

	7	6	5	4	3	2	1	0
0	Operation Code (A0h)							
1	Reserved (0)			Service Action (0Ch)				
2	Reserved (0)					Reporting Options		
3	Requested Operation Code(0)							
4	(MSB)	Requested Service Action						
5								(LSB)
6	(MSB)	Allocation Length						
9								(LSB)
10	Reserved (0)							
11	Control							

CDB fields

Reporting Options	000b	Only reporting option 000b is supported. This requests that the Device Server returns a list of supported operations and service actions from the port through which the REPORT SUPPORTED OPERATION CODES command was received.
Requested Operation Code	Ignored for Reporting Option 000b.	
Requested Service Action	Ignored for Reporting Option 000b.	
Allocation Length	The number of bytes allocated for the returned parameter data.	

Data returned

The returned Parameter Data contains a 4-byte header followed by one or more command descriptors:

	7	6	5	4	3	2	1	0
0	(MSB)	Command Data Length						
3								(LSB)

Command Data Length	The amount of Parameter Data available for return minus the size of the header.

Each command descriptor contains either a supported Operation Code or an Operation Code/Service Action combination. The format of each descriptor is as follows:

	7	6	5	4	3	2	1	0
0	Operation Code							
1	Reserved (0)							
2	(MSB)	Service Action						
3								(LSB)
4	Reserved (0)							
5	Reserved (0)							ServActv
6	(MSB)	CDB Length						
7								(LSB)

Operation Code	The operation code of the supported command.	
Service Action	A supported service action of the operation code. If no service actions are supported this field will be 00h.	
ServActv	0	No service actions are supported and the Service Action field should be ignored.
	1	This operation code supports service actions and the Service Action field contains a valid service actions.
CDB Length	The length of the CDB for this operation code or operation code/service action command.	

REPORT SUPPORTED TASK MANAGEMENT FUNCTIONS A3h (0Dh)

Description

The REPORT SUPPORTED TASK MANAGEMENT FUNCTIONS command returns information about which task management functions are supported by the logical unit that is addressed.

Pre-execution checks

Illegal Field	Reservation	Deferred Error
Unit Attention	Diagnostic Status	

Command descriptor block

	7	6	5	4	3	2	1	0
0	Operation Code (A3h)							
1	Reserved (0)			Service Action (0Dh)				
2–5	Reserved (0)							
6	(MSB)	Allocation Length						
9								(LSB)
10	Reserved (0)							
11	Control							

CDB field

Allocation Length	The number of bytes that have been allocated for the returned parameter data. This value must be at least four.

Data returned

The returned Parameter Data is as follows:

	7	6	5	4	3	2	1	0
0	ATS	ATSS	CACAS	CTSS	LURS	QTS	TRS	WakeS
1–3	Reserved (0)							

ATS	0	*FC drives:* The Abort Task task management function is not supported.
	1	*SCSI and SAS drives:* The Abort Task task management function is supported.
ATSS	1	The Abort Task Set task management function is supported.
CACAS	0	The Clear ACA task management function is not supported.
CTSS	1	The Clear Task Set task management function is supported.
LURS	1	The Logical Unit Reset task management function is supported.

QTS	0	*FC and SCSI drives:* The Query Task task management function is not supported.
	1	*SAS drives:* The Query Task task management function is supported.
TRS	0	*SCSI and SAS drives:* The Target Reset task management function is not supported.
	1	*FC drives:* The Target Reset task management function is supported.
WakeS	0	The Wakeup task management function is not supported.

REPORT TARGET PORT GROUPS A3h

Description

The REPORT TARGET PORT GROUPS command returns information about target port groups from which the addressed logical unit allows access.

Pre-execution checks

Illegal Field Deferred Error Unit Attention Diagnostic Status

Command descriptor block

	7	6	5	4	3	2	1	0
0	Operation Code (A3h)							
1	Reserved (0)			Service Action (0Ah)				
2–5	Reserved (0)							
6	(MSB)	Allocation Length						
9								(LSB)
10	Reserved (0)							
11	Control							

CDB field

Allocation Length	The number of bytes that have been allocated for the returned parameter data. Zero is not considered an error.

Data returned

The returned Parameter Data is as follows:

	7	6	5	4	3	2	1	0
0	(MSB)	Returned Data Length (*n*–3)						
3								(LSB)
4	Primary Target Port Group Descriptor							
...								
...	ADC Target Port Group Descriptor							
n								

Primary Target Port Group descriptor

	7	6	5	4	3	2	1	0
0	Pref (1)	Reserved (0)			Asymm Access State (0)			
1	T_Sup (0)	Reserved (0)			U_Sup (0)	S_Sup (0)	AN Sup (0)	AO_Sup (1)
2	Target Port Group Descriptor (0)							
3								
4	Reserved (0)							
5	Status Code (2)							
6	Reserved (0)							
7	Target Port Count (*SCSI:* 1, *FC and SAS:* 2)							
8	First Target Port Descriptor							
...								
...	Last Target Port Descriptor							
n								

Asymm Access State	0	This target port group has currently active/optimized asymmetric access.
AO_Sup	1	The Active/Optimized asymmetric state is supported from this port group to the SSC Logical unit if set to 1.

Target Port descriptor

	7	6	5	4	3	2	1	0
0	Reserved (0)							
1								
2	Relative Port Identifier							
3								

Asymm Access State	3	This target port group has currently unavailable asymmetric access.
AO_Sup	1	The Unavailable asymmetric state is supported from this port group to the SSC Logical unit if set to 1.

ADC Target Port Group descriptor

	7	6	5	4	3	2	1	0
0	Pref (0)	Reserved (0)			Asymm Access State (3)			
1	T_Sup (0)	Reserved (0)			U_Sup (1)	S_Sup (0)	AN Sup (0)	AO_Sup (1)
2	Target Port Group Descriptor (1)							
3								
4	Reserved (0)							
5	Status Code (2)							
6	Reserved (0)							
7	Target Port Count (1)							
8	Reserved (0)							
9								
10	Relative Port Identifier (0)							
11								

Relative Port Identifier	00h	*For SCSI drives*
	01h	*FC and SAS drives:* Port A
	02h	*FC and SAS drives:* Port B

REQUEST SENSE 03h

The REQUEST SENSE command transfers sense data held within the drive to the host during a data-in phase. The data is valid in the following circumstances:

- After reporting CHECK CONDITION status to the host.
- After a command has terminated with an unexpected BUS FREE.
- Immediately after the following commands that cause tape motion:

READ	SPACE	VERIFY
WRITE	WRITE FILEMARKS	REWIND

Positional sense data is valid whenever media is present and loaded and no higher priority sense data is present. An unsolicited request sense (that is, one with no preceding CHECK CONDITION) will result in sense data with no valid data, which will be all zeros.

NOTE: The drive maintains valid positional information for normal read and write commands only (READ, WRITE, SPACE, WRITE FILEMARKS, REWIND). If abnormal commands (such as WRITE BUFFER) are received this positional sense information is lost. See "Sense data management" on page 195.

The drive clears sense data for the host following execution of the REQUEST SENSE command for that host, unless the data is positional sense data.

Pre-execution checks

Only Illegal Field Check is performed before execution of the command.

Command descriptor block

	7	6	5	4	3	2	1	0
0	Operation Code (03h)							
1	LUN			Reserved (0)				DESC
2–3	Reserved (0)							
4	Allocation Length							
5	Control							

CDB fields

LUN	This field is ignored.	
DESC	0	Fixed Format sense data will be returned.
	1	Descriptor Format sense data will be returned.
Allocation Length	0	No data is transferred to the host.
	>0	The maximum amount of sense data in bytes that should be transferred to the host. The drive returns up to Allocation Length bytes of data; any extra sense data is lost.

Request Sense data

Sense data is recovered from the drive by means of a REQUEST SENSE command following the reporting of CHECK CONDITION by the drive. There are two formats in which the data can be returned: Fixed and Descriptor.

Fixed format

The Fixed format of the returned data is as follows:

	7	6	5	4	3	2	1	0
0	Valid	Error Code						
1	Segment Number (0)							
2	Mark	EOM	ILI	Rsvd(0)	Sense Key			
3	(MSB)	Information Bytes						
6								(LSB)
7	Additional Sense Length (10h)							
8	(MSB)	Command Specific Information Bytes						
11								(LSB)
12	Additional Sense Code							
13	Additional Sense Code Qualifier							
14	Field Replaceable Unit Code							
15	SKSV	C/D	Reserved (0)		BPV	Bit Pointer		
16	(MSB)	Field Pointer/Drive Error Code						
17								(LSB)
18–20	Reserved (0)							
21	Reserved (0)				CLN	Reserved (0)		
22	Pad bytes (0)							
23								

Returned Sense data fields

Valid	1	Indicates that the information bytes contain valid information as defined in the SCSI specification.
Error Code	70h	Indicates that the error is *current*, that is, it is associated with the command for which CHECK CONDITION status has been reported.

	71h	Indicates that the error is *deferred*. A deferred error occurs when there is a failure for an operation that has already been terminated with a GOOD status, or when failure occurs in "cleanup" activity following an operation that was terminated by BUS RELEASE. The command for which CHECK CONDITION status was reported is therefore unlikely to be the cause of the deferred error. It simply gives the drive the opportunity to report CHECK CONDITION status for an error that already exists.
Segment Number	This field is cleared to zero.	
Mark	1	The Mark bit is set to 1 if a SPACE, READ or VERIFY command did not complete because a filemark was read. This bit may only be set if the sense key is NO SENSE.
EOM	1	The End of Medium flag is set if a WRITE or WRITE FILEMARKS command completed in the early warning area. If no other error occurred, the sense code will be set to NO SENSE with additional sense of 0002h (EOT). If another error occurred, the sense code and additional sense will reflect that error. It is also set if BOP is encountered while spacing over blocks or filemarks in the reverse direction.
ILI	1	Indicates that the requested block length did not match the actual block length. Only READ and VERIFY can cause this bit to be set.
Sense Key	See "Sense Keys" on page 198 for details of sense keys that can be returned.	
Information Bytes	The Information Bytes field is only valid if the Valid bit is set. It contains residue information following the failure of either a READ, WRITE, WRITE FILEMARKS or SPACE command. The field can take a negative value, expressed in 2's complement notation for the SPACE command. See the description of the command that failed for the contents of the field.	
Additional Sense Length	10h	Specifies the number of additional sense bytes to follow. It is never truncated to reflect the actual Transfer Length.
Command Specific Information Bytes	0	Provides additional information specific to the failing command. The field is normally set to 0.
Additional Sense Code and Qualifier	These two bytes provide additional information about the cause of the CHECK CONDITION, or the current tape position when the REQUEST SENSE is unsolicited. See "Additional Sense Codes" on page 199.	
SKSV	0	The Sense Key Specific Bytes (bytes 15 through 17) are invalid. The C/D, BPV and Bit pointer fields will be zero. The top byte of the Field Pointer will be zero, and the bottom byte will contain a product-specific error code.
	1	The Sense Key Specific Bytes are valid. This will only happen when the bytes assume the role of Field Pointer Bytes as defined by ANSI. This occurs when an Illegal Field check detects an error in a command descriptor block or a Parameter List check detects an error in a command parameter list.

C/D	*Command Data.* Only valid if the SKSV flag is set.	
	0	The Field Pointer information applies to the parameter list for the command.
	1	The Field Pointer information applies to the command descriptor block.
BPV	Bit Pointer Valid	
	0	The Bit Pointer field is invalid.
	1	The Bit Pointer field is valid. If the SKSV bit is set then the BPV bit must be set as well.
Bit Pointer	Identifies the bit position of the field in error, whether it is a command descriptor or a command parameter list field. When a multi-bit field is in error, this will point to the most significant bit of that field. Only valid when the SKSV flag is set.	
Field Pointer /Drive Error Code	*If SKSV = 1*, the interpretation of this field depends on the sense key reported. For Sense Key = 5 (ILLEGAL REQUEST), this field represents the Field Pointer, identifying in which byte of the command descriptor or parameter list an error was detected. Note that the drive scans from byte 0 bit 7 of a command or parameter list through to byte *n* bit 0. The field and bit pointers are set to point to the most significant bit of the field that is in error. See the illegal field check and the parameter list check. For Sense Key = 0 (NO SENSE) or 2 (NOT READY), this field represents the Progress Indication, where the returned value is a numerator that has 65536 (10000h) as its denominator. This reflects the progress being made through the total operation *If SKSV = 0*, this field represents the Drive Error Code. The top byte of this field will be zero. The bottom byte contains the drive error code associated with the failure of the previous command, or zero in the case of no failure and no appropriate error code. If the drive's power-on self-test failed then, in the absence of an error code associated with the most recent command, this byte will be set to the error code generated by the failing test.	
	NOTE: Drive error codes are provided for information only; they are intended to assist in product integration and fault diagnosis. The codes should *not* be relied on by "generic" host drivers, since these are specific to the product. For a list of codes, see Chapter 10 of the *Hardware Integration Guide*, Volume 1 of the HP LTO Ultrium Technical Reference Manual.	
CLN	0 1	The drive is OK. The drive requires cleaning. The front panel LEDs will be displaying a "clean me" sequence or message. This bit is cleared to zero after a cleaning cartridge has been used.

Descriptor format

The Descriptor format of the returned data is as follows:

	7	6	5	4	3	2	1	0
0	Valid	Response Code						
1	Reserved(0)				Sense Key			
2	Additional Sense Code							
3	Additional Sense Code Qualifier							
4–6	Reserved (0)							
7	Additional Sense Length (*n*–7)							
8	(MSB)	Sense Data Descriptor 0						
:								(LSB)

:

:	Sense Data Descriptor *X*
n	

Returned Sense data fields

Response Code	72h	The error is *current*, that is, it is associated with the command for which CHECK CONDITION status has been reported.
	73h	The error is *deferred*. A deferred error occurs when there is a failure for an operation that has already been terminated with a GOOD status, or when failure occurs in "cleanup" activity following an operation that was terminated by BUS RELEASE. The command for which CHECK CONDITION status was reported is therefore unlikely to be the cause of the deferred error. It simply gives the drive the opportunity to report CHECK CONDITION status for an error that already exists.
Additional Sense Length	The number of additional sense bytes to follow, ≤244. It is never truncated to reflect the actual Transfer Length.	
Additional Sense Code and Qualifier	Additional information about the cause of the CHECK CONDITION, or the current tape position when the REQUEST SENSE is unsolicited. See "Additional Sense Codes" on page 199.	
Sense Data Descriptor	At least one descriptor is sent (Drive Error Code), the others may or may not be sent depending on the nature of the CHECK CONDITION.	

Information Sense data descriptor

	7	6	5	4	3	2	1	0
0	Descriptor Type (00h)							
1	Additional Length (0Ah)							
2	Valid (1)	Reserved (0)						
3	Reserved (0)							
4	Information Bytes							
11								

Sense Key Specific Sense data descriptor

Only one of these is reported: Field Pointer or Progress Indication.

Field Pointer

The Sense Key is set to Illegal Request.

	7	6	5	4	3	2	1	0
0	Descriptor Type (02h)							
1	Additional Length (06h)							
2–3	Reserved (0)							
4	SKSV (1)	C/D	Reserved (0)			BPV	Bit Pointer	
5	Field Pointer							
6								
7	Reserved (0)							

Progress Indication

The Sense Key is set to No Sense or Not Ready.

	7	6	5	4	3	2	1	0
0	Descriptor Type (02h)							
1	Additional Length (06h)							
2–3	Reserved (0)							
4	SKSV (1)	Reserved (0)						
5	Progress Indication							
6								
7	Reserved (0)							

Process Indication	The percent complete indication in which the returned value is a numerator that has 65,536 (10000h) as its denominator. The progress indication is based on the total operation.

Stream Commands Sense data descriptor

	7	6	5	4	3	2	1	0
0	Descriptor Type (04h)							
1	Additional Length (02h)							
2–3	Reserved (0)							
4	Mark	EOM	ILI	Reserved (0)				

Drive Error Code Sense data descriptor *(Vendor Specific)*

	7	6	5	4	3	2	1	0
0	Descriptor Type (80h)							
1	Additional Length (02h)							
2–3	Reserved (0)							
4	Mark	EOM	ILI	Reserved (0)				
4	Drive Error Code							
11								

Cleaning Needed Sense data descriptor *(Vendor Specific)*

	7	6	5	4	3	2	1	0
0	Descriptor Type (81h)							
1	Additional Length (02h)							
2–3	Reserved (0)							CLN (1)
4	Reserved (0)							

Sense data management

The drive maintains three sets of sense data for every initiator on the bus. For a single host the following sense data is maintained:

- Current sense
- UNIT ATTENTION sense
- DEFERRED ERROR sense

Unless otherwise stated, all the following descriptions apply to the sense data for a single host whose command is being executed.

Current sense

Current sense is the data that is returned in response to a REQUEST SENSE command. It is modified or updated in the following circumstances:

- It is cleared in response to the arrival of any command other than REQUEST SENSE or INQUIRY.

- It is cleared following execution of a REQUEST SENSE command.
- If the current command fails, sense is set according to the failure and CHECK CONDITION is reported to the host that sent the command.
- If the previous command terminated with an unexpected BUS FREE, current sense is set according to the reason for the bus release.
- If the command fails its pre-execution check for Unit Attention, UNIT ATTENTION sense is copied to the Current sense, and CHECK CONDITION is reported to the host that sent the command.
- If the command fails its pre-execution check for Deferred Error, DEFERRED ERROR sense is copied to the Current sense, and CHECK CONDITION is reported to the host that sent the command.

Clearing current sense

Clearing the Current sense involves setting sense fields as follows:

```
Valid = 0
error code = 0x70
segment number = 0
ILI = 0
sense key = 0
information bytes = 0
command specific information = 0
fru code = 0
SKSV = 0
```

UNIT ATTENTION sense

UNIT ATTENTION sense is set when one of the following Unit Attention conditions occur:

- *FC drives:* Power On, Target Reset, Logical Unit Reset, Process Login (PRLI)
- *SCSI drives:* Power On, SCSI Reset, Bus Device Reset
- *SAS drives:* Power On, SCSI Reset, (HARD_RESET primitive), Logical Unit Reset
- Media inserted
- A load command executed by a third party
- Mode Sense parameters changed by another initiator
- Drive firmware has been updated

UNIT ATTENTION sense will persist for a host until the host sends a command that has Unit Attention as part of its pre-execution checks. When the Unit Attention pre-execution check fails, the UNIT ATTENTION sense is copied to the Current sense and CHECK CONDITION status is reported to the host. The UNIT ATTENTION sense is cleared. The host is then expected to issue a REQUEST SENSE command to recover the UNIT ATTENTION sense (which is now the new Current sense).

It is possible for multiple UNIT ATTENTION conditions to arise (for example, after a power-on followed by a tape load), such that the initiator does not read one condition before the next occurs. In this case a prioritizing scheme is used. If a UNIT ATTENTION condition exists and a new one occurs, then the UNIT ATTENTION sense will be overwritten by the new sense only if the new sense has a higher priority.

The order of priority is as follows:

Power-on, Reset	*highest priority*
Tape Loaded	
Mode Parameters Changed	
Microcode Downloaded	*lowest priority*

UNIT ATTENTION sense that arises as a result of a command executing will not be posted to the sending initiator, but will be set for the other initiators.

DEFERRED ERROR sense

DEFERRED ERROR sense is generated when an operation fails and CHECK CONDITION status cannot be reported to the host for one of the following reasons:

- The operation had immediate-report on (for example, REWIND with the Immed bit set, or LOAD).
- The operation was a write that was immediate-reported on after its data was successfully placed in the write-behind queue.
- The operation was abandoned without status (that is, a bus release occurred) after what the drive perceived was a catastrophic error or when an error occurred following the drive's honoring of an ABORT message. Following the bus release, the drive performed "cleanup" activity that failed. The Deferred Error refers to the reason for this failure.

When any one of the above occurs, the sense generated will be DEFERRED ERROR sense. This sense persists until the host sends a command that has Unit Attention as part of its pre-execution checks. When the Deferred Error pre-execution check fails, the DEFERRED ERROR sense is moved to the Current sense and CHECK CONDITION status is reported to the host. The host is then expected to issue a REQUEST SENSE command to recover the new Current sense data, otherwise the data will be lost.

Write-behind deferred errors

If the Buffered Mode field of the MODE SELECT parameter header is not zero, data buffering is enabled. If an error occurs in flushing the write-behind data, DEFERRED ERROR sense is set for all hosts that the drive thinks have write-behind data in the buffer. For each of these hosts, the following occurs when its next command is to be executed:

- If the command is WRITE or WRITE FILEMARKS the DEFERRED ERROR sense is copied to Current sense and the error is changed to a Current error (the Error Code field is set to 70h). The information bytes will contain residue information reflecting the size of the write-behind queue plus the transfer size of the current command. CHECK CONDITION is reported. When the host reads sense data with a REQUEST SENSE, it will see an error for the WRITE with residue information indicating data lost for that write and previous writes.
- If the command is not a write command and the Deferred Error check is performed as part of the pre-execution checks, CHECK CONDITION status is reported. The DEFERRED ERROR sense is copied to Current sense. The DEFERRED ERROR sense is cleared. The host is expected to retrieve the sense by sending a REQUEST SENSE, otherwise the data will be lost.

Bus release deferred errors

The drive will release the bus to terminate an operation (such as READ) when the host sends an ABORT message or when the drive fails to send status due to a catastrophic error.

In each case, the operation does not terminate immediately since the logical position will have to be established on the other side of the block that was about to be transferred, or was being transferred. If an error subsequently occurs while trying to complete the read, the sense generated is a DEFERRED ERROR. It is therefore possible but highly unlikely to have DEFERRED ERROR sense flagged for a command without immediate report.

Sense keys

The following table lists the sense keys that may be returned by HP LTO Ultrium drives. SCSI sense keys are 4-bit codes returned in the sense data. They indicate in what general area the problem that has just been experienced falls. For a clearer indication of the nature of the problem, refer to the additional sense code.

Code	Name	Description	ASC/Qs
0h	NO SENSE	There is no real problem. The sense information is probably indicating some condition (such as encountering a filemark).	0000h, 0001h, 0002h, 8282h
1h	RECOVERED ERROR	Returned if a Mode Select parameter is truncated or if a TapeAlert event is being reported.	5D00h, 3700h
2h	NOT READY	The drive is not in a state to be able to execute the request. See also the Media Access check.	0400h, 0401h, 0402h, 3003h, 3007h, 3A00h, 3E00h
3h	MEDIUM ERROR	The command failed, believed to be caused by a problem with the tape.	0002h, 0004h, 0407h, 0C00h, 1100h, 1102h, 1400h, 3001h, 3002h, 3004h, 3100h, 3B00h, 5000h, 5200h, 5300h
4h	HARDWARE ERROR	The command failed, believed to be caused by a problem with the drive hardware.The FRU in the sense data should indicate which part of the hardware is faulty.	0403h, 40*XX*h, 4400h, 5100h, 5300h
5h	ILLEGAL REQUEST	The last command sent to the drive or the data associated with the command violated conditions imposed by the drive on its acceptance. See also the Illegal Command, Illegal Field, Fixed Bit, Reservation and Parameter List pre-execution checks.	1A00h, 2000h, 2400h, 2500h, 2600h, 2601h, 5302h, 8283h
6h	UNIT ATTENTION	Indicates some condition of which the host needs to be made aware. See also the Unit Attention check.	2800h, 290*X*h, 2A01h, 3F01h, 5DFFh

Code	Name	Description	ASC/Qs
7h	DATA PROTECT	A command that reads or writes the medium was attempted on a block that is protected. See also the Media Write check.	2700h, 3000h, 7409h, 740Ah
8h	BLANK CHECK	The drive tried to read unwritten tape.	0005h, 1403h
9h	VENDOR SPECIFIC	Never returned by HP tape drives	
Ah	COPY ABORTED	Never returned by HP tape drives	
Bh	ABORTED COMMAND	*FC drives:* The drive has terminated a command. This may be due to another initiator sending a Task Management Command or a Process Logout (PRLO).	3D00h, 4300h, 4500h, 4700h, 4800h, 4900h, 4A00h, 4B00h, 4E00h
		SCSI drives: The drive has terminated a command. This may be due to a problem related to the SCSI bus.	3D00h, 4300h, 4500h, 4700h, 4800h, 4900h, 4A00h, 4B00h, 4E00h
		SAS drives: The drive has terminated a command. This may be due to a problem related to the SAS link.	3D00h, 4300h, 4500h, 4700h, 4800h, 4900h, 4A00h, 4B00h, 4B01–4B06h, 4E00h
Ch	EQUAL	Never returned by HP tape drives	
Dh	VOLUME OVERFLOW	Data could not be written due to lack of remaining space on the tape. See the WRITE and WRITE FILEMARKS commands.	0002h
Eh	MISCOMPARE	Never returned by HP tape drives	
Fh	RESERVED	Never returned by HP tape drives	

Additional Sense codes

This section contains a list of all the additional sense codes that an HP LTO Ultrium drive can return, in numerical order. The Sense Keys under which each code could appear are also listed. The ASCQ bytes are present at bytes 12 and 13 of the sense data.

Code	Description	Explanation
00 00h	No additional sense	The flags in the sense data indicate the reason for command failure.
00 01h	Filemark detected	A Read or a Space command terminated early because a filemark has been encountered. The File Mark flag will be set.
00 02h	End of Tape detected	A Write or a Write Filemarks command ended in the early warning area. *or* A command terminated early because End of Tape or physical end of tape was encountered. The EOM flag will be set.

Code	Description	Explanation
00 04h	Beginning of Tape detected	A Space command terminated early because beginning of tape was encountered. The EOM flag will be set.
00 05h	End of Data detected	A Read or a Space command terminated early because End of Data was encountered.
00 16h	Operation in progress	An command is in progress and has not yet completed.
00 18h	Erase operation in progress	An immediate mode ERASE is still in progress.
00 19h	Locate operation in progress	An immediate mode LOCATE is still in progress.
00 1Ah	Rewind operation in progress	An immediate mode REWIND is still in progress.
04 00h	LUN not ready, cause not reportable	This is set if an unload is occurring with immediate report on, or initiated through the front panel, or a different host initiated the command.
04 01h	LUN in process of becoming ready	A media access command has been received while a load is occurring with immediate report on, or initiated through the front panel, or a different host initiated the command.
04 02h	LUN not ready, Initializing command required	A tape is present in the drive but is not logically loaded. A Load command is required.
04 03h	LUN not ready, manual intervention required	A tape is present in the drive but could not be loaded or unloaded without manual intervention.
04 07h	Command in progress	The tape drive is currently executing a command.
04 0Ch	LUN not accessible, port in unavailable state	The command is not available on the specified Logical Unit when sent to the drive through the specified port.
04 12h	Logical unit offline	The command cannot be executed because the specified logical unit has not yet been configured via the appropriate port.
0B 01h	Thermal limit exceeded	There has been a failure due to the drive temperature being outside the acceptable range.
0C 00h	Write error	A write operation has failed to write data or filemarks to tape. This is probably due to bad media but may be hardware related. Residue information will normally be supplied.
11 00h	Unrecovered read error	A Read operation failed. This is probably due to bad media but may be hardware related.
11 12h	Media Auxiliary Memory read error	The Host Attribute area in MAM is invalid.
14 00h	Recorded entity not found	A Space or Locate failed because a format violation prevented the target of the operation from being found.
14 03h	End of data not found	A read-type operation failed because a format violation related to a missing EOD data set, or there was an attempt to read a brand new tape.

Code	Description	Explanation
1A 00h	Parameter list length error	The amount of data sent in a Mode Select or Log Select command is incorrect *or* The Mode Header indicates a Mode Block Descriptor but no Mode Block Descriptor is sent.
20 00h	Invalid command operation code	The operation code in the command was not valid.
24 00h	Invalid field in Command Descriptor Block	An invalid field has been detected in a Command Descriptor Block.
25 00h	LUN not supported	The command was addressed to a non-existent logical unit number.
26 00h	Invalid field in parameter list	An invalid field has been detected in the data sent during the data phase
26 01h	Parameter not supported	The command was addressed to a non-existent logical unit number.
26 04h	Invalid release of persistent reservation	The Persistent Reservation holder has tried to release the persistent reservation using the PERSISTENT RESERVE OUT command, but the Scope or Type supplied was invalid.
26 10h	Data decryption key fail limit reached	A SECURITY PROTOCOL OUT command has failed because an incorrect key has been sent to the drive followed by a read, and this has happened ten times consecutively.
27 00h	Write-protected	A write-type operation has been requested on a tape that has been write-protected.
28 00h	Not ready to ready transition, medium may have changed	A tape has been loaded successfully into the drive and is now ready to be accessed.
29 01h	Power-on reset	The drive has powered on since the host last accessed it.
29 02h	SCSI bus reset	*FC drives:* The drive has received its first process login. The drive will be implicitly logged out after a Target Reset so this ASCQ will be posted after the host has performed port/process login.
		SCSI and SAS drives: The drive has received a SCSI reset signal since the host last accessed it.
29 03h	Bus device reset	*FC drives:* The drive has received a process login when it was previously logged in for a particular host, or a Logical Unit Reset has been sent.
		SCSI and SAS drives: The drive has received a SCSI bus device reset message or Logical Unit Reset since the host last accessed it.

Code	Description	Explanation
29 03h	Bus device reset	*FC drives:* The drive has received a process login when it was previously logged in for a particular host.
		SCSI drives: The drive has received a SCSI bus device reset message since the host last accessed it.
29 04h	Internal firmware reboot	The drive has reset itself.
29 05h	Transceivers to SE	*SCSI and SAS drives:* The transceivers on the bus have been reset to Single-Ended.
29 06h	Transceivers to LVD	*SCSI and SAS drives:* The transceivers on the bus have been reset to LVD.
29 07h	I_T nexus loss occurred	The drive has lost the connection with the initiator (host server).
2A 01h	Mode parameters changed	The Mode parameters for the drive have been changed by an initiator other than the one issuing the command.
2A 02h	Log parameters changed	The Log parameters for the drive have been changed by an initiator other than the one issuing the command.
2A 03h	Reservations pre-empted	A PERSISTENT RESERVE OUT command with the Clear service action removed all reservations and the persistent reservation.
2A 04h	Reservations released	A PERSISTENT RESERVE OUT command executed. The original persistent reservation has been replaced with another of a different type or removed completely.
2A 05h	Registrations pre-empted	A PERSISTENT RESERVE OUT command was executed which removed all registrations.
2A 11h	Data encryption parameters changed by another initiator	The encryption parameters that this initiator was using have been modified by another initiator.
2A 12h	Data encryption parameters changed by vendor specific event	The encryption parameters that this initiator was using have been modified because of a vendor specific event (such as tape unload or reservation released).
2A 13h	Data Encryption Key Instance Counter has changed	The drive received a WRITE command from an initiator that had locked its encryption parameters to a specific Key Instance Counter, whose value has now changed.
2C 00h	Command sequence invalid	The sequence of SCSI commands is invalid. *Example 1:* The use of the echo buffer was in valid. A WRITE BUFFER command is necessary before a READ BUFFER command. *Example 2:* Another initiator has already started a firmware download process..

Code	Description	Explanation
2C 0Bh	Not reserved	If the "Only If Reserved" bit is set in the Device Configuration mode page, and the drive does not hold a (persistent) reservation, some commands will not be allowed to execute. In other words, some commands can only be executed if the drive is reserved.
30 00h	Incompatible medium installed	A write-type operation could not be executed because it is not supported on the type of tape that is loaded.
30 01h	Unknown format	An operation could not be carried out because the tape in the drive is of a format not supported by the drive.
30 02h	Cannot read media: incompatible format	An operation could not be completed because the logical format is not correct.
30 03h	Cleaning cartridge installed	An operation could not be carried out because the tape in the drive is a cleaning cartridge.
30 04h	Cannot write medium	An attempt was made to write to a cartridge that has Cartridge Memory errors.
30 05h	Cannot write medium, incompatible format	For example, the drive tried to write to a tape of an incompatible generation.
30 07h	Cleaning failure	A cleaning operation was attempted but could not be completed for some reason.
30 0Ch	WORM—overwrite attempted	*FC and SCSI drives:* A write operation could not be executed because an overwrite has been attempted on a WORM cartridge. This may be because an overwrite backup was specified instead of an appended backup.
		SAS drives: Not applicable.
30 0Dh	WORM medium—integrity check failed	*FC and SCSI drives:* The drive has detected an inconsistency when performing an integrity check on a WORM cartridge. The cartridge may have been tampered with.
		SAS drives: Not applicable.
31 00h	Medium format corrupted	Data could not be read because the format on tape is not valid, although it is in a known format.
37 00h	Rounded parameter	A Mode Select command parameter has been rounded because the drive cannot store it with the accuracy of the command.
3A 00h	Medium not present	A media-access command has been received when there is no tape loaded.
3A 04h	Medium not present, Media Auxiliary Memory accessible	A media access command has been received when the tape has been loaded but not threaded. This will be reported if the hold bit of the LOAD CDB was set or the Autoload field in the Control mode page is non zero.

Code	Description	Explanation
3B 00h	Sequential positioning error	A command has failed and left the logical position at an unexpected location.
3B 0Ch	Position past BOM	A SET CAPACITY command was received when the logical position was not BOT, a necessary condition for this command.
3D 00h	Invalid bits in Identify message	An illegal Identify message has been received by the drive at the start of a command.
3E 00h	Logical unit has not self-configured yet	The drive has just powered on and has not completed its self-test sequence, so it cannot process commands.
3F 01h	Firmware upgraded	The firmware in the drive has just been changed by a Write Buffer command.
3F 05h	Device identifier changed	The Device ID has been changed successfully.
3F 0Eh	Reported LUNs data has changed	
3F 0Fh	Echo buffer overwritten	A READ BUFFER command has been received with Echo Buffer mode set, and the echo buffer has been overwritten by a different host from that which issued the READ BUFFER command.
40 *XX*h	Diagnostic failure on component *XX*	A diagnostic test has failed. The Additional Sense Code Qualifier is a vendor-specific code indicating the failing component.
43 00h	Message error	A message could not be sent or received because of excessive transmission errors.
44 00h	Internal target failure	A hardware failure has been detected in the drive that has caused the command to fail.
45 00h	Select or reselect failure	An attempt to reselect an initiator in order to complete the command has failed.
47 00h	SCSI parity error	The drive has detected a parity error, for example, during Message phase or Data phase.
47 01h	Data phase CRC error detected	*SCSI only in non-Information Units mode:* The drive has detected a CRC error during the data out phase.
47 03h	Information Unit CRC error detected	*SCSI only in non-Information Units mode:* The drive has detected a CRC error during the command IU or data out phase.
48 00h	Initiator Detected Error message received	A command failed because an Initiator Detected Error message was received.
49 00h	Invalid message error	The command failed because an invalid message was received by the drive.
4A 00h	Command phase error	A command could not be executed because too many parity errors occurred in the command phase

Code	Description	Explanation
4B 00h	Data phase error	A command could not be completed because too many errors occurred during the data phase.
4B 01h	Invalid Target Port Transfer Tag received	*SAS drives:* Drive received frame with an incorrect or unexpected TPTT
4B 02h	Too much write data	*SAS drives:* Initiator sent more data frames than expected/permitted by the drive
4B 03h	ACK/NAK timeout	*SAS drives:* Initiator failed to respond with either an ACK or a NAK within the timeout period
4B 04h	NAK received	*SAS drives:* Initiator sent NAK indicating a CRC error was detected on received data
4B 05h	Data offset error	*SAS drives:* The drive received a data frame with an incorrect or out-of-sequence data offset field.
4B 06h	Initiator response timeout	*SAS drives:* The initiator did not respond within the permitted timeout period.
4E 00h	Overlapped commands attempted	An initiator selected the drive even though it already had a command outstanding.
50 00h	Write append error	A write-type command failed because the point at which to append data was unreadable.
51 00h	Erase failure	An erase command failed to erase the required area on the tape.
52 00h	Cartridge fault	A command could not be completed because of a fault in the tape cartridge.
53 00h	Media load or eject failed	An attempt to load or eject the tape failed because of a problem with the tape.
53 01h	Unload tape failure	The tape unload failed because it cannot be physically completed at this time.
53 02h	Medium removal prevented	An unload command has failed to eject the tape because medium removal has been prevented.
53 04h	Medium thread or unthread failure	The threading or unthreading process failed.
55 03h	Insufficient resources	
55 04h	Insufficient registration resources	*FC drives:* There is only space for requests from 32 initiators to register, using PERSISTENT RESERVE OUT commands.
		SAS drives: Not applicable
55 06h	Media Auxiliary Memory full	There is insufficient space in the Host Attribute area in MAM to fit the attribute that need to be written.
5D 00h	Failure prediction threshold exceeded	Failure Prediction thresholds have been exceeded indicating that TapeAlert flags have been activated.

Code	Description	Explanation
5D FFh	Failure prediction threshold exceeded (false)	A MODE SELECT command has been used to test for the Failure Prediction system.
74 00h	Security error	Generic security (encryption/decryption) error. For example, the Decryption mode is set to RAW and the drive has been asked to read, but the hardware does not allow this Decryption mode on the current block.
74 01h	Unable to decrypt data	The drive encountered encrypted data while reading, but decryption mode is not enabled.
74 02h	Unencrypted data encountered while decryptrng	The decryption mode is enabled but the drive encountered non-encrypted data while reading.
74 03h	Incorrect data encryption key	The drive read into a block of data which could not be decrypted with the current decryption key.
74 04h	Crytographic integrity validation failed	The next block failed the integrity validation process while the drive was attempting to read it.
74 08h	Digital signature validation failure	The SCSI command used to download the new firmware image failed because the firmware image digital signature could not be correctly validated.
74 09h	Encryption mode mismatch on read	The drive tried to read a block written in EXTERNAL encryption mode when it is set only to read blocks written in ENCRYPT encryption mode, or vice versa.
74 0Ah	Encrypted block not RAW read-enabled	The decryption mode is set to RAW but the block on tape is marked as disabled for reads in RAW mode.
82 82h	Drive requires cleaning	The drive has detected that a cleaning operation is advisable to maintain good operation.
82 83h	Bad microcode detected	The data transferred to the drive during a firmware upgrade is corrupt or incompatible with the drive hardware.

Error codes

The error codes that can be reported in bytes 16 and 17 are listed in Chapter 10 of the *Hardware Integration Guide*, Volume 1 of the HP LTO Ultrium Technical Reference Manual.

RESERVE UNIT 16h/56h

This command enables the host to reserve the drive. Reserving a device is a way of ensuring exclusive access to that device from a single initiator for the period of the reservation.

Once reserved, the drive will execute commands received from the reserving initiator or from the third-party initiator if the 3rd-Pty option has been selected. Commands from other initiators will have RESERVATION CONFLICT status reported for them, apart from INQUIRY, LOG SENSE, READ BLOCK LIMITS, READ MEDIA SERIAL NUMBER, RELEASE UNIT, REPORT DENSITY SUPPORT, REPORT DEVICE IDENTIFIER, REPORT LUNS, REPORT TARGET PORT GROUPS and REQUEST SENSE.

The INQUIRY, LOG SENSE, READ BLOCK LIMITS, READ MEDIA SERIAL NUMBER, RELEASE UNIT, REPORT DENSITY SUPPORT, REPORT DEVICE IDENTIFIER, REPORT LUNS, REPORT TARGET PORT GROUPS and REQUEST SENSE commands are immune to the effects of a reservation and will continue to execute for all hosts. The RELEASE UNIT command will have GOOD status reported for other hosts, but will have no effect on the reservation.

The 10-byte RESERVE UNIT command is supported by all drives. Its functionality is the same as for the 6-byte command, but it also supports third-party reservation.

The reservation will stay in effect until:

- The reserving host sends another RESERVE UNIT command.
- The reserving host sends a RELEASE UNIT command, clearing the reservation.
- A power-on, firmware upgrade or forced eject.

Pre-execution checks

Illegal Field Deferred Error Unit Attention

If the drive is reserved by some other host then reservation conflict status is reported to the host.

Command descriptor block

6-byte

	7	6	5	4	3	2	1	0
0	Operation Code (16h)							
1	Reserved (0)			3rd Pty(0)	Third-Party Device ID (0)			Rsvd(0)
2	Reserved (0)							
4								
5	Control							

3rdPty	This is always zero because third-party reservation is not supported.
Third-Party Device ID	This is always zero because third-party reservation is not supported.

10-byte

	7	6	5	4	3	2	1	0
0	Operation Code (56h)							
1	Reserved (0)			3rd Pty	Reserved (0)		LongID(0)	Rsvd(0)
2	Reserved (0)							
3	Third-Party Device ID							
4–6	Reserved (0)							
7	(MSB)	Parameter List Length						
8								(LSB)
9	Control							

3rd Pty	0	Third-party reservation is not requested.
	1	The initiator requests third-party reservation, that is, it will reserve the drive on behalf of another initiator. The value in the Third-Party Device ID field is valid.
LongID	This is always zero because device IDs greater than 255 are not supported.	
Third-Party Device ID	This is required and used only when the 3rd Pty bit is set, in which case this field specifies the SCSI ID of the initiator to be granted the reservation of the logical unit. The drive preserves the reservation until one of the following occurs: • It is superseded by another valid RESERVE UNIT command from the same initiator. • It is released by the same initiator with a third-party RELEASE UNIT command with the same value in the Third-Party Device ID field. • It is released by a hard reset or a power-cycle. The drive ignores any attempt to release the reservation made by any other initiator, including the initiator for which the reservation was made. It is valid for an initiator to reserve the drive using a third-party reservation over itself. In this case, a non-third-party RELEASE UNIT command could also release the reservation.	

REWIND 01h

REWIND causes the drive to write all buffered logical objects to tape and then positions the tape at BOM (beginning of media). Once a rewind is started, it will complete even if the SCSI operation is aborted (for example, if the host selects and sends an abort message).

Pre-execution checks

Illegal Field	Reservation	Deferred Error
Unit Attention	Media Access	Diagnostic Status

Command descriptor block

	7	6	5	4	3	2	1	0
0	Operation Code (01h)							
1	Reserved (0)							Immed
2–4	Reserved (0)							
5	Control							

CDB fields

Immed	0	Status is returned after the rewind has completed.
	1	The drive first writes any unwritten buffered data to tape. It then returns GOOD status to the host before beginning the actual rewind operation.

Rewind specific status

If the rewind is successful, unsolicited positional sense will indicate that the tape is at BOM by the EOD bit being set and an additional sense code of 0004h (BOP).

Vendor-unique ENABLE TRANSPORT LAYER RETRIES *(SAS drives only)* C2h

This provides a fast benign command to enable SAS Transport Layer Retries. The state of the Transport Layer Retries set by this command for a given host is reflected in the Protocol-Specific Logical Unit mode page for SAS SSP (18h) for that host.

Pre-execution checks

Illegal Field

If the check passes, GOOD status is reported.

Command descriptor block

	7	6	5	4	3	2	1	0
0	Page Code (C2h)							
1	Reserved (0)							Enable
2–4	Reserved (0)							
5	Control							

CDB fields

Enable	Enables or disables SAS Transport Layer Retries for this initiator:	
	0	Disabled
	1	Enabled

SECURITY PROTOCOL IN A2h

The SECURITY PROTOCOL IN command returns information about the security data for the I_T nexus in the device server and on the tape.

Pre-execution checks

Illegal Field Reservation Deferred Error Unit Attention

Command descriptor block

	7	6	5	4	3	2	1	0
0	Operation Code (A2h)							
1	Security Protocol							
2	Security Protocol Specific							
3								
4	Inc_512 (0)	Reserved (0)						
5	Reserved (0)							
6	Allocation Length							
9								
10	Reserved (0)							
11	Control							

CDB fields

Security Protocol	00h	Security protocol information
	20h	Tape Data Encryption security protocol
Security Protocol Specific	The contents of this field depend on the protocol specified by the Security Protocol field. See below.	
Allocation Length	The number of bytes allocated for the returned parameter data	

Returned data

Security protocol information

When the Security Protocol field is 00h, the only supported values for the Security Protocol Specific field are as follows:

Code	Description
0000h	Supported security protocol list
0001h	Certificate data

Supported security protocol list:

	7	6	5	4	3	2	1	0
0	Reserved (0)							
5								
6	Supported Security Protocol List Length (02h)							
7								
8	First Supported Security Protocol (00h)							
9	Last Supported Security Protocol (00h)							

Certificate data:

	7	6	5	4	3	2	1	0
0	Reserved (0)							
1								
3	Certificate length (00h)							
4								

The device server does not have a certificate to transfer.

Tape Data Encryption security protocol

When the Security Protocol field is 20h, the following table specifies the pages which are supported (specified in the Security Protocol Specific field). They must be requested individually.

Code	Description
0000h	Tape Data Encryption In Support page
0001h	Tape Data Encryption Out Support page
0010h	Data Encryption Capabilities page
0011h	Supported Key Formats page
0012h	Data Encryption Management Capabilities page
0020h	Data Encryption Status page
0021h	Next Block Encryption Status page

Tape Data Encryption In Support page:

	7	6	5	4	3	2	1	0
0	Page Code (0000h)							
1								
2	Page Length (0Eh)							
3								

	7	6	5	4	3	2	1	0
4	Tape Data Encryption In Support Page Code (0000h)							
5								
6	Tape Data Encryption Out Support Page Code (0001h)							
7								
8	Data Encryption Capabilities Page Code (0010h)							
9								
10	Supported Key Formats Page Code (0011h)							
11								
12	Data Encryption Management Capabilities Page Code (0012h)							
13								
14	Data Encryption Status Page Code (0020h)							
15								
16	Next Block Encryption Status Page Code (0021h)							
17								

Tape Data Encryption Out Support page:

	7	6	5	4	3	2	1	0
0	Page Code (0001h)							
1								
2	Page Length (02h)							
3								
4	Tape Data Encryption In Support Page Code (0010h)							
5								

Data Encryption Capabilities page:

	7	6	5	4	3	2	1	0
0	Page Code (0010h)							
1								
2	Page Length (28h)							
3								
4	Reserved (0)							
19								
20	Algorithm Index (01h)							
21	Reserved (0)							
22	Descriptor Length (0014h)							
23								
24	AVFMV	SDK_C (0)	MAC_C (1)	DED_C (1)	Decrypt_C (2)		Encrypt_C (2)	
25	Reserved (0)		Nonce_C (1)		Reserved (0)		UKADF(0)	AKADF(0)
26	Maximum Unauthenticated Key-Associated Data Bytes (20h)							
27								
28	Maximum Authenticated Key-Associated Data Bytes (0Ch)							
29								
30	Key Size (0020h)							
31								
32	Reserved (0)				RDMC_C (4)			EAREM (1)
33	Reserved (0)							
39								
40	Encryption Algorithm Identifier (AES-CGM) (00010014h)							
43								

AVFMV	*Algorithm Valid For Mounted Volume*. Set to 1 if there is a tape threaded and it is encryption-capable using the supplied algorithm index.
RDMC_C	The *Raw Decryption Mode Control Capabilities* field is set to 04h to indicate that: • Performing read operations in RAW decryption mode is not allowed by default. • The application may control future RAW reads via the RDMC field in the Set Data Encryption page (see page 220).
EAREM	The *Encryption Algorithm Records Encryption Mode* bit is set to one if the encryption mode is recorded with each encrypted block.

Supported Key Formats page:

	7	6	5	4	3	2	1	0
0	Page Code (0011h)							
1								
2	Page Length (01h)							
3								
4	Key Format (00h)							

See the "Set Data Encryption page" on page 219 of the SECURITY PROTOCOL OUT command for a description of Key Format of 00h.

Data Encryption Management Capabilities page:

	7	6	5	4	3	2	1	0
0	Page Code (0012h)							
1								
2	Page Length (0Ch)							
3								
4	Reserved (0)							
5	Reserved (0)					CKOD_C (1)	CKORP_(1)	CKORL_C (1)
6	Reserved (0)							
7	Reserved (0)					AITN_C (1)	Local_(1)	Public_C (1)
8	Reserved (0)							
15								

Data Encryption Status page:

	7	6	5	4	3	2	1	0
0	Page Code (0020h)							
1								
2	Page Length (*n*–3)							
3								
4	I_T Nexus Scope			Reserved (0)		Key Scope		
5	Encryption Mode							
6	Decryption Mode							
7	Algorithm Index (01h)							
8	Key Instance Counter							
11								
12	Reserved (0)					CEEMS		RDMD
13	Reserved (0)							
23								
24	Key-Associated Data Descriptors List							
n								

Key Instance Counter	This field is relative to the key indicated by the Key Scope field value. One key instance counter is kept for each key the device server is managing. It is cleared to zero only after a power-on condition. Any event that sets, clears or changes one of the parameters in a set of security parameters will increment this value. The counter can roll over.
RDMD	The *Raw Decryption Mode Disabled* bit is set to one if the drive is configured to mark each encrypted block as disabled for RAW read operations based on the RAW decryption mode disable parameter value saved for the I_T nexus on which the command was received.
CEEMS	The Check External Encryption Mode Status field contains the value from the check external encryption mode parameter value saved for the I_T nexus on which the command was received.

Next Block Encryption Status page:

This page will perform Media Access Checks.

	7	6	5	4	3	2	1	0
0	Page Code (0021h)							
1								
2	Page Length (*n*–3)							
3								
4	Block Number							
11								
12	Compression Status				Encryption Status			
13	Algorithm Index (01h)							
14	Reserved (0)						EMES	RDMDS
15	Reserved (0)							
16	Key-Associated Data Descriptors List							
n								

Compression Status	Only 0h is supported.	
	0h	Unable to determine if the block is compressed.
Encryption Status	Only 01h, 03h, 05h and 06h are supported.	
	01h	Capable of determining if the block is encrypted, but not at this time (because of EOD, read error, or similar).
	03h	The block is not encrypted.
	05h	The block is encrypted by a supported encryption algorithm. KAD descriptors are returned.
	06h	The block is encrypted by a supported encryption algorithm, but the drive cannot decrypt the block, or does not have the correct key or nonce value.
EMES	The *Encryption Mode External Status* bit is set to one if the Encryption Status field is set to either 5h or 6h, and the next block is marked as having been written to the medium while the encryption mode was set to EXTERNAL. It is set to zero otherwise.	
RDMDS	The *Raw Decryption Mode Disabled Status* bit is set to one if the Encryption Status field is set to either 5h or 6h, and the next block is marked as disabled for RAW decryption mode operations. It is set to zero otherwise.	

SECURITY PROTOCOL OUT B5h

The SECURITY PROTOCOL OUT command is used to configure the data security parameters for the I_T nexus in the device server and on the tape.

Pre-execution checks

Illegal Field Reservation Deferred Error Unit Attention

Command descriptor block

	7	6	5	4	3	2	1	0
0	Operation Code (B5h)							
1	Security Protocol							
2	Security Protocol Specific							
3								
4	Inc_512 (0)	Reserved (0)						
5	Reserved (0)							
6	Allocation Length							
9								
10	Reserved (0)							
11	Control							

CDB fields

Security Protocol	20h	Tape Data Encryption security protocol
Security Protocol Specific	The contents of this field depend on the protocol specified by the Security Protocol field. See below.	
Allocation Length	The number of bytes allocated for the returned parameter data	

Returned data

Tape Data Encryption security protocol information

When the Security Protocol field is 20h, only the Set Data Encryption page (0010h) is supported, which must be specified in the Security Protocol Specific field.

NOTE: Encryption is only performed on LTO-4 tapes. On other tapes, an attempt to write when encryption is enabled or read when decryption (or RAW mode) is enabled will terminate with CHECK CONDITION status, with sense of DATA PROTECT and additional sense of 3000h (incompatible medium installed). Attempts to enable encryption or decryption when other LTO format tapes are loaded will terminate with CHECK CONDITION status, with sense of ILLEGAL REQUEST and additional sense of 2600h (invalid field in parameter list).

Set Data Encryption page

	7	6	5	4	3	2	1	0
0	Page Code (0010h)							
1								
2	Page Length (*n*–3)							
3								
4	Scope			Reserved (0)				Lock
5	CEEM [0]		RDMC [0]		SDK (0)	CKOD	CKORP	CKORL
6	Encryption Mode							
7	Decryption Mode							
8	Algorithm Index (01h)							
9	Key Format (00h)							
10	Reserved (0)							
17								
18	Key Length (20h)							
19								
20	Key							
51								
52	Key-Associated Data Descriptors List							
n								

Scope	0h	Public	All fields in the Set Data Encryption page other than Scope and Lock fields are ignored. The I_T nexus will use shared data encryption parameters. If no I_T nexuses are sharing data encryption parameters, the drive will use the default parameters.
	1h	Local	Data Encryption parameters are not shared, but are unique to this I_T nexus.
	2h	All I_T Nexus	Data encryption parameters will be shared with all I_T nexuses whose scope is Public.
Lock	1	The I_T nexus will be associated (and locked) to the set of data encryption parameters established after processing the SECURITY PROTOCOL OUT command, *and* the current Key Instance Counter. The bit can only be cleared through a hard reset or another SECURITY PROTOCOL OUT from the same I_T nexus.	
CEEM	*Check External Encryption Mode.* If this field is set to either 10b or 11b, and the decryption mode is set to DISABLE, SECURITY PROTOCOL OUT is terminated with CHECK CONDITION, with addition sense of set to 2600h (invalid field in parameter list).		

	00b	Same as 10b.
	01b	Do not check the encryption mode used to write the block.
	10b	On read and verify commands, check the encryption mode used to write the block. Decryption Mode is set to DECRYPT or MIXED. Report an error if the block was written in EXTERNAL mode. The sense key is set to DATA PROTECT with additional sense of 7409h (encryption mode mismatch on read).
	11b	On read and verify commands, check the encryption mode used to write the block. Decryption Mode is setto DECRYPT or MIXED. Report an error if the block was written in ENCRYPT mode. The sense key is set to DATA PROTECT with additional sense of 7409h (encryption mode mismatch on read).
RDMC	*Raw Decryption Mode Control.* This field specifies if the drive shall mark each encrypted block it writes to tape as disabled for read operations with the decryption mode set to RAW. The field is ignored if the Encryption Mode field is not set to ENCRYPT.	
	00b	The drive marks each encrypted block according to the RDMC_C flag setting on the Data Encryption Capabilities page (see page 214).
	01b	Reserved.
	10b	The drive marks each encrypted block it writes as enabled for RAW decryption mode operations.
	11b	The drive marks each encrypted block it writes as disabled for RAW decryption mode operations.
	If the decryption mode is set to RAW and an attempt is made to read or verify an encrypted block that was disabled for raw decryption mode operations, the drive terminates the command with CHECK CONDITION. The sense key is set to DATA PROTECT with additional sense of 7409h (encrypted block not RAW read-enabled).	
CKOD	*Clear Key On Demount*	
	1	Data Encryption parameters are switched to the default values upon tape unload.
CKORP	*Clear Key On Reservation Pre-empted*	
	1	Data Encryption parameters are switched to the default values upon pre-emption of the current persistent reservation. If the CKOD bit is set and there is no tape loaded, the command will be terminated with CHECK CONDITION, a sense key of ILLEGAL REQUEST and additional sense of 2400h (invalid field in CDB). If the CKORP bit is set and there is no persistent reservation in place for the I_T nexus,, the command will be terminated with CHECK CONDITION, a sense key of ILLEGAL REQUEST and additional sense of 2400h (invalid field in CDB).

CKORL	*Clear Key On Reservation Loss*		
	1	Data Encryption parameters are switched to the default values upon reservation loss.	
Encryption Mode	0h	Disable	No data encryption will be performed.
	1h	External	Data sent via WRITE commands has been already encrypted by a supported encryption algorithm.
	2h	Encrypt	Data from WRITE commands will be encrypted with the specified key.
Decryption Mode	0h	Disable	The data on the tape is not encrypted, so no decryption will be performed.
	1h	Raw	Data is encrypted on tape, but no decryption will be performed. The data is passed directly to the host.
	2h	Decrypt	Data is encrypted on tape and decryption will be performed.
	3h	Mixed	There is both encrypted and non-encrypted data on tape. The device will decrypt or not accordingly.
Key-Associated Data Descriptors	If the Encryption Mode is set to Encrypt, the drive will save the KAD descriptors. They are associated with every block that is encrypted with the specified key. The descriptors are specified in increasing numeric order. See below for the format of the descriptors.		
Key Descriptor Type	0h	Unauthenticated key-associated data	
	1h	Authenticated key-associated data	
	2h	Nonce value (not supported)	
	3h	Security meta-data key-associated data	
Authenticated	0h	Reserved. This is always the case if KAD descriptors are included.	
	1h	The descriptor is not covered by the authentication	
	2h	No attempt has been made to authenticate the descriptor	
	In the Set Data Encryption page and in the Data Encryption Status page (SECURITY PROTOCOL IN), if KAD descriptors are included the Authenticated field is always reserved. In the Next Block Encryption Status page (SECURITY PROTOCOL IN), if KAD descriptors are included the Authenticated field will have the following values: 01h if U-KAD 02h if A-KAD 03h if S-KAD		

Key Descriptor format:

	7	6	5	4	3	2	1	0
0	Key Descriptor Type							
1	Reserved (0)					Authenticated		

	7	6	5	4	3	2	1	0
2	Key Descriptor Length (*n*–3)							
3								
4	Key Descriptor							
n								

Specific status

- If the drive processes a WRITE command and the Key Instance Counter has changed since the last time it was locked, the WRITE command (and any subsequent WRITE commands) will be terminated with CHECK CONDITION, a sense key of DATA PROTECT and additional sense of 2A13h (data encryption key instance counter changed). Only a hard reset or a SECURITY PROTOCOL OUT from the same I_T nexus will clear this condition.If the CKOD bit is set and there is no tape loaded, the command will be terminated with CHECK CONDITION, a sense key of ILLEGAL REQUEST and additional sense of 2400h (invalid field in CDB).
- If the CKORP bit is set and there is no persistent reservation in place for the I_T nexus,, the command will be terminated with CHECK CONDITION, a sense key of ILLEGAL REQUEST and additional sense of 2400h (invalid field in CDB).
- If the CKORL bit is set and there is no reservation in place for the I_T nexus,, the command will be terminated with CHECK CONDITION, a sense key of ILLEGAL REQUEST and additional sense of 2400h (invalid field in CDB).
- If the Encryption Mode is set to Encrypt and the Key Length is zero, the command will terminate with CHECK CONDITION, a sense key of ILLEGAL REQUEST and additional sense of 2600h (invalid field in parameter list).
- If the Decryption Mode is set to Decrypt or Mixed and the Key Length is zero, the command will terminate with CHECK CONDITION, a sense key of ILLEGAL REQUEST and additional sense of 2600h (invalid field in parameter list).

SEEK *(CD-ROM mode)* 2Bh

SEEK is executed for 2Bh when the drive is in CD-ROM mode. When out of CD-ROM, the LOCATE command, which shares the opcode, is executed.

Assuming the pre-execution checks are passed, GOOD status is always reported.

Pre-execution checks

Illegal Field	Flag Link	Bad LUN	Reservation
Deferred Error	Unit Attention	Media Access	Diagnostic Status

Command descriptor block

	7	6	5	4	3	2	1	0
0	Operation Code (2Bh)							
1	Logical Unit Number			Reserved (0)				
2	(MSB)	Logical Block Address						
5								(LSB)
6–8	Reserved (0)							
9	Control							

CDB fields

Logical Block Address	This field is ignored.

SEND DIAGNOSTIC 1Dh

SEND DIAGNOSTIC tells the drive to perform either its standard self-test, or diagnostics specified in the parameter list on itself. The parameter list is transferred to the drive in a series of data-out phases; each 8-byte data-out phase specifies a diagnostic to be performed by the drive. It is not an error to set Self-Test = 0 and to have a zero-length parameter list.

The test results can be retrieved with the RECEIVE DIAGNOSTIC RESULTS command.

Pre-execution checks

Illegal Field Reservation Deferred Error Unit Attention

- If Self-Test = 0, the UntOffl bit must be set, otherwise CHECK CONDITION is reported. Sense data will be as described in Illegal Field Checks.
- If Self-Test = 1, the Parameter List Length field must be zero. Otherwise CHECK CONDITION is reported. Sense data will be as described in Illegal Field Checks.
- It is not an error to set Self-Test = 0 and to have a zero-length parameter list.

Command descriptor block

	7	6	5	4	3	2	1	0
0	Operation Code (1Dh)							
1	Reserved (0)			PF (1)	Rsvd(0)	Self-Test	DevOffL(0)	UnitOffL
2	Reserved (0)							
3	(MSB)	Parameter List Length						
4								(LSB)
5	Control							

CDB fields

PF	*Page Format.* Specifies that the accompanying data follows the SCSI-3 Diagnostic Page format. It must be set to 1.	
Self-Test	0	Perform the diagnostics specified in the parameter list. The UnitOffL bit must be set, otherwise CHECK CONDITION is reported. The drive reports status when the command has been completed.
	1	Perform the standard self-test depending on the value of UnitOffL (see above). The Parameter List Length must be 0 otherwise CHECK CONDITION is reported. The drive will report GOOD status following the pre-execution checks and before executing the command.
DevOffl	*Device Offline bit.* Must be cleared to zero.	

UnitOffL	*Unit Offline bit*	
	0	Indicates that the host is not prepared for the drive to perform tests that could affect logical position.
	1	Indicates that the host is prepared for the drive to perform tests that could affect logical position, modify the tape or modify cartridge status. This bit must be set if the Self-Test bit is 0.
Parameter List Length		Indicates how many bytes of diagnostic parameter data are to be sent to the drive. The length of the data phase for SEND DIAGNOSTIC is limited to 4 bytes of header plus 34 parameters, each of which is 4 bytes long. This gives an upper limit for the parameter list length of 136 bytes.

Data required

No data is required if the standard self-test is to be performed. Otherwise, a single diagnostic page must be provided as a parameter.

Specific status

Any Send Diagnostic command received with a Enclosure Services page number (01h to 0Fh) will generate CHECK CONDITION with sense key of ILLEGAL REQUEST and additional sense of 3501h (unsupported enclosure function).

The drive reports GOOD status if the diagnostics pass. It will report CHECK CONDITION if the diagnostics fail, with a sense key of HARDWARE ERROR and additional sense of 4000h.

More detailed results can then be recovered using the Receive Diagnostic Results page.

Standard self-test

With a tape inserted: If Self-Test = 1 and UntOffl = 0, a test is performed that does not affect the contents of the tape. This test is a more extensive set of the tests carried out at power-on.

If UntOffl = 1, the tape contents can be overwritten and will be undefined after the test. A user can re-use the tape after the test.

With no tape in the drive: The same self-test will be executed regardless of the setting of UntOffl.

The results of any self-test (power on or not) can be determined by reading the Self-Test diagnostic page before executing a diagnostic (which will overwrite the result).

SET CAPACITY 0Bh

This provides a means of changing the logical length of the currently-loaded media. The primary use envisaged is for testing purposes, although it may also be used in other circumstances where a shortened tape may be beneficial.

Note that all data currently on the media will be lost following successful execution of this command. The command is only accepted when the media is positioned at Beginning of Media (BOM).

With WORM cartridges, the command is only accepted and executed if the cartridge has not been initialized, that is, it has never been written to. Otherwise the cartridge is rejected with CHECK CONDITION, sense key of Data Protect and additional sense of 300Ch (WORM media—overwrite attempted). TapeAlert flags 3Ch (WORM media—overwrite attempted) and 09h (write-protect) are set.

Pre-execution checks

Illegal Field	Reservation	Deferred Error
Unit Attention	Media Access	Media Write

Command descriptor block

	7	6	5	4	3	2	1	0
0	Operation Code (0Bh)							
1	Reserved (0)							Immed
2	Reserved (0)							
3	(MSB)	Capacity Proportion Value						
4								(LSB)
5	Control							

CDB fields

Immed	0	Status will not be returned until the SET CAPACITY operation has completed.
	1	Status will be returned as soon as the CDB has been parsed.
Capacity Proportion Value	The portion of the total volume capacity to be made available for use. The value given here is the numerator of a fraction with a denominator of 65,535. The resulting available capacity will be $\frac{\text{total volume capacity} \times \text{capacity proportion value}}{65535}$	

Note that the LTO format enforces a minimum tape length. A value that would result in a tape length below this minimum will be silently rounded up to the minimum permitted length.

The following table gives the minimum acceptable Capacity Proportion Values and the approximate capacity they will give:

Cartridge	Min. capacity proportion value	Resultant approx. min. capacity	Max. capacity
LTO 2	1605h	17.2 GB	200 GB
LTO 3	151Ah	33 GB	400 GB
LTO 4	1055h	51 GB	800 GB

NOTE: Capacities are approximate and can be affected by defects that reduce the actual capacity of the tape. Other factors, such as compression and block packing, may also affect capacity.

SET DEVICE IDENTIFIER A4h (06h)

SET DEVICE IDENTIFIER allows a initiator to set the Device ID information to that supplied in the Parameter List. This information can be later retrieved by the REPORT DEVICE IDENTIFIER command.

Upon successful completion the command will post sense key UNIT ATTENTION with additional sense of 3F05h (device identifier changed) to all initiators except the one that issued the command. Once set the Device Identifier will only be cleared by a successful Set Device Identifier command or a drive reset.

Pre-execution checks

Illegal Field Reservation Deferred Error Unit Attention

Command descriptor block

	7	6	5	4	3	2	1	0
0	Operation Code (A4h)							
1	Reserved (0)			Service Action (06h)				
2–5	Reserved (0)							
6	(MSB)	Parameter List Length						
9								(LSB)
10	Reserved (0)							
11	Control							

CDB fields

Parameter List Length	The length in bytes of the Device Identifier to be set. If the value exceeds 64, CHECK CONDITION is returned with additional sense of 2400h (invalid field in CDB).	
	0	Not an error, but clears any previously stored Device ID.

Data

The format of the Device Identifier supplied in the Parameter List is as follows:

	7	6	5	4	3	2	1	0
0	(MSB)	Identifier						
n								(LSB)

SPACE 11h/91h

SPACE provides a variety of positioning functions that are determined by Code and Count fields in the Command Descriptor Block. Both forward (towards EOM) and reverse (towards BOM) positioning are provided.

Any unwritten data in the buffer is flushed to tape before the space is started. The logical media position is then modified according to the Code and Count fields. Once the space has started, it will complete even if the SCSI operation is aborted for some reason (for example, the host selects and sends an abort message).

Pre-execution checks

Illegal Field	Reservation	Deferred Error
Unit Attention	Media Access	Diagnostic Status

The Code field must be 0, 1 or 3. If it is not then CHECK CONDITION status is reported. Sense data will be as described in the Illegal Field Checks.

Command descriptor block

6-byte version

	7	6	5	4	3	2	1	0
0	Operation Code (11h)							
1	Reserved (0)					Code		
2	(MSB)	Count (*n*)						
4								(LSB)
5	Control							

16-byte version

	7	6	5	4	3	2	1	0
0	Operation Code (91h)							
1	Reserved (0)					Code		
2–3	Reserved (0)							
4	(MSB)	Count (*n*)						
11								(LSB)
12	(MSB)	Parameter Length						
13								(LSB)
14	Reserved (0)							
15	Control							

CDB fields

Code	The Code field indicates what is to be spaced to:	
	000	**Blocks**—The number of blocks crossed is dictated by Count.
	001	**Filemarks**—The number of filemarks crossed is dictated by Count.
	011	**EOD**—Space to the end of data in the current active partition.
Count	• When spacing over *blocks* or *filemarks* this field indicates how many blocks or marks should be crossed. Spacing is forward (towards EOM) unless Count is negative (twos complement) when the spacing is towards BOM. • When spacing to *EOD* the Count field is ignored. • When not spacing to EOD, if Count is zero, the SPACE command is treated as a null operation. The logical position remains unchanged, and unwritten data is not flushed to tape.	
Parameter Length	0	Explicit block mode is not supported.

Space specific status

If the drive fails to space either from a medium error or from some sort of non-fatal drive error, CHECK CONDITION status is reported. The sense key will be set to MEDIUM ERROR. Additional sense depends on the nature of the error. The two most common additional sense code and qualifiers in this case will be: 1100h (unrecovered read error) and 3B00h (sequential positioning error).

The drive implements the following priority scheme when a tape position point is encountered:

Lowest priority	**Blocks**	
	Filemarks	If the drive meets a filemark while spacing to a block CHECK CONDITION is reported. The Mark bit in the sense data is set, and the sense key is NO SENSE. Additional sense is 0001h (filemark encountered). The final position will be before or after the filemark depending on whether the space was reverse or forward.
	EOD	If the drive meets EOD while spacing to a block or mark, CHECK CONDITION is reported. The EOM bit in the sense data is set. The sense key is BLANK CHECK and additional sense is 0005h (EOD encountered).
	BOM	If the drive meets BOM while spacing, CHECK CONDITION is reported. The EOM bit and Valid bit in the sense data are set to 1 and the information bytes set to the total number of blocks or filemarks that remain to be spaced over (in other words, the requested number minus the number that have been spaced over). The sense key is NO SENSE and additional sense is 0004h (BOT detected).
Highest priority	**EOM**	If the drive meets EOM while spacing, CHECK CONDITION is reported. The EOM bit in the sense data is set. The sense key is MEDIUM ERROR and additional sense is 0002h (EOP/M detected).

- If “blank media” is encountered during a space (in other words, the drive attempted to space on an unformatted tape), the drive behaves as if EOD was at BOM. It will then respond with GOOD status to a request to space to EOD, and with CHECK CONDITION to any other forward spacing request. Additional sense is set to 1403h (End of data not found).
- Early warning end of medium information is not reported.
- If a space records or space filemarks command fails then the sense data information bytes will be set to the absolute value of the difference between the requested number of marks/records and the actual number of marks/records spaced over and the Valid bit set. The residue for a prematurely terminated Space towards BOM will always be a positive value.
  NOTE: This value will only be accurate if the sense key is NO SENSE.
- If the format of the data on tape is corrupt then CHECK CONDITION status is reported. The sense key will be set to MEDIUM ERROR. Additional sense will be set to 3001h (unknown format).
- If the drive fails to read data from tape due to either a MEDIUM ERROR or some sort of non fatal drive error then CHECK CONDITION status is reported. The sense key will be set to HARDWARE ERROR Additional sense will be set to 3B00h (sequential positioning error).

START/STOP *(CD-ROM mode)* 1Bh

START/STOP is executed for 1Bh when the drive is in CD-ROM mode. When out of CD-ROM mode, the LOAD/UNLOAD command, which shares the opcode, is executed.

Assuming that the pre-execution checks are passed, GOOD status is always reported.

Pre-execution checks

Illegal Field	Flag Link	Bad LUN
Reservation	Deferred Error	Unit Attention

Command descriptor block

	7	6	5	4	3	2	1	0
0	Operation Code (1Bh)							
1	Logical Unit Number			Reserved (0)				Immed
2–3	Reserved (0)							
4	Reserved (0)						LoEj	Start
5	Control							

CDB fields

Immed	This flag is ignored.
LoEj	Load/Eject. This flag is ignored.
Start	This flag is ignored.

TEST UNIT READY 00h

TEST UNIT READY checks if the drive is ready for commands that access the tape. This is done by the pre-execution Media Access check; it is not a request for a self-test. If the drive has a tape loaded, the command returns a GOOD status. Otherwise, CHECK CONDITION is reported and the sense key is NOT READY.

Pre-execution checks

Illegal Field	Reservation	Deferred Error
Unit Attention	Media Access	Media Information

Command descriptor block

	7	6	5	4	3	2	1	0
0	Operation Code (00h)							
1	Reserved (0)							
4								
5	Control							

Test Unit Ready specific status

If all the pre-execution checks pass, GOOD status is reported.

VERIFY 13h

VERIFY verifies one or more blocks beginning with the next block on the tape. The verification is media verification only. It reads data from the tape as it would for a read but then immediately discards it. No data is transferred between the host and drive.

The command is identical to the READ command in most respects. The pre-execution checks are identical. Sense data reporting on errors/exceptions is identical. The only differences are:

- No data phases occur during verification.
- The Verify command has no SILI bit. When an illegal length record is encountered, Verify behaves like READ with the SILI bit clear.

NOTE: Verify will not complete until all data has been read. It does not support the ANSI "byte compare" or "Immed" options (see the ANSI SCSI specification).

Pre-execution checks

Illegal Field	Fixed Bit	Reservation	Deferred Error
Unit Attention	Media Access	Diagnostic Status	

Command descriptor block

	7	6	5	4	3	2	1	0
0	Operation Code (13h)							
1	Reserved (0)					Immed(0)	BCmp(0)	Fixed
2	(MSB)	Verification Length						
4								(LSB)
5	Control							

CDB fields

Immed	0	The Immediate Reporting option is not supported, so this bit must be 0.
BCmp	0	The Byte compare option is not supported, so this bit must be 0.
Fixed	0	The Verification Length field specifies the length of the data to be verified in bytes.
	1	The Verification field specifies the length of the data to be verified in blocks. The size of each block (in bytes) is specified by the current block length specified in the Mode Parameter block descriptor.
Verification Length	0	No data is verified. This is not considered an error and the current logical position will be unchanged.
	>0	The amount of data to be verified, in bytes or blocks as specified by the Fixed field.

WRITE 0Ah

Zero or more blocks of data are transferred from the host to tape starting at the current logical position.

It is recommended that the Buffered Mode field of the MODE SELECT Parameter is set to either 1 or 2 so that Immediate reporting is enabled; upon a write command the drive will report GOOD status once the data is successfully transferred to the data buffer (but not necessarily to tape).

Data held in the buffer is flushed to tape in the following circumstances:

- A SCSI command is received that forces a flush:

ERASE	LOAD	LOCATE	LOG SELECT	MODE SELECT	READ
REWIND	SEND DIAGNOSTIC	SPACE	VERIFY	WRITE BUFFER	

- Buffered mode is not enabled. If buffered mode has not been set to 1 or 2, the buffer is flushed before the command completes.
- The write delay time is exceeded. This is defined by the Write Delay field of the Device Configuration Mode Select page. If the drive is idle for longer than this (no operations that access the tape have been performed), any data in the buffer is flushed to tape.

Pre-execution checks

Illegal Field	Fixed Bit	Reservation	Deferred Error
Unit Attention	Media Access	Media Write	Diagnostic Status

Command descriptor block

	7	6	5	4	3	2	1	0
0	Operation Code (0Ah)							
1	Reserved (0)							Fixed
2	(MSB)	Transfer Length						
4								(LSB)
5	Control							

CDB fields

Fixed	0	The Transfer Length field specifies the length of the transfer in bytes.
	1	The Transfer Length field specifies the length of the transfer in blocks. The size of each block (in bytes) is determined by the current Block Length given in the Mode Select Parameter block descriptor.
Transfer Length	0	No data is transferred. The current logical position will be unchanged.
	>0	The amount of data to be transferred, in bytes or blocks as determined by the Fixed field.

Write specific status

See also the "Additional Sense codes" on page 199 for a variety of possible hard errors.

An attempt to write to a write-protected cartridge will produce a CHECK CONDITION with a sense key of DATA PROTECT and additional sense of 2700h (write-protected).

An attempt to write to a cartridge whose Cartridge Memory has failed will produce a CHECK CONDITION with a sense key of MEDIUM ERROR and additional sense of 3004h (cannot write medium). If, however, the tape is not positioned at BOT, the drive will respond with sense data as if the tape is write-protected. The WP flag in the Mode Parameter Header will also be set.

If EOM (end of medium) is encountered during a write, CHECK CONDITION status is reported. The EOM flag will be set. The sense key will be set to VOLUME OVERFLOW with additional sense of 0002h (EOT). Residue information will be as below. The logical position will be EOD.

Subsequent Request Sense commands will, however, give tape position as EOP/M. It may still be possible to write a smaller quantity of information (such as filemarks or a smaller block). This is because logical position after failure to write a block returns to the start of the unwritten block.

Early Warning EOM information is reported only if a write operation is successful. This is done by reporting CHECK CONDITION status with a sense key of NO SENSE and additional sense of 0002h (EOT). Residue information is valid and indicates zero blocks/bytes.

Residue information:

Residue information depends on two variables:

- Fixed or Variable block mode
- Immediate or Non-Immediate Report (Buffered mode)

Block Mode	Buffered Mode	Residue
Variable	0	Number of unwritten bytes
Fixed	0	Number of unwritten blocks
Variable	not 0	Total number of unwritten bytes and marks (including those buffered before the command was received). The size can be greater than the command operation size.
	specifically 1	Contains residues of all initiators with data in the buffer.
Fixed	not 0	Total number of unwritten blocks and marks (including those buffered before the command was received). The size can be greater than the command operation size.
	specifically 1	Contains residues of all initiators with data in the buffer.

Residue information is set in the sense data byte, with the Valid bit set and the information bytes set to the residue.

WRITE ATTRIBUTE 8Dh

The WRITE ATTRIBUTE command allows an application client to write attribute values to MAM (Medium Auxiliary Memory). Application clients should issue READ ATTRIBUTE commands before using this command to discover what support the device server has for MAM.

Pre-execution checks

Illegal Field Deferred Error Unit Attention Media Access

For this command to be executed, there must be a tape in the drive, even if it is only partially loaded.

Command descriptor block

	7	6	5	4	3	2	1	0
0	Operation Code (8Dh)							
1–4	Reserved (0)							
5	Volume Number (0)							
6	Reserved (0)							
7	Partition Number (0)							
8–9	Reserved (0)							
10	(MSB)	Parameter List Length						
13								(LSB)
14	Reserved (0)							
15	Control							

CDB fields

Volume Number	The number of the volume within the MAM. The number of volumes of the MAM must be equal to that of the tape. In the case of LTO Ultrium, the only has a single volume, so this field is be set to 0.	
Partition Number	The number of the partition within the MAM. The number of partitions of the MAM must be equal to that of the tape. In the case of LTO Ultrium, the only has a single partition, so this field is be set to 0.	
Parameter List Length	The length in bytes of the parameter list contained in the Data-Out buffer.	
	0	The Data-Out buffer is empty. This condition is not be considered an error.
	n	The length in bytes of the parameter list contained in the Data-Out buffer.

Parameter list format:

The parameter list has the following format. The attributes should be sent in ascending numerical order. For details of attribute data see "MAM attribute data" on page 150.

	7	6	5	4	3	2	1	0
0	(MSB)	Parameter Data Length (*n*–3)						
3								(LSB)
4	Attribute 1							
a								
:	:							
m	Attribute *x*							
n								

Parameter Data Length	This is not mandatory and will be ignored by the device server because it duplicates the Parameter List Length.

If the parameter data contains an attribute with an Attribute Length of zero, one of the following actions will occur:

- If the attribute is read-only or unsupported, no attributes are changes. The command fails, returning CHECK CONDITION with ILLEGAL REQUEST sense and additional sense of 2600h (invalid field in parameter list).
- If the attribute can be written to, it is deleted and will not be returned after a subsequent READ ATTRIBUTE command.
- If the attribute does not exist, the command cannot affect it. This is not considered an error.

Write Attribute specific status

The command will be terminated and will return CHECK CONDITION under the following circumstances:

Description	Sense Key	Additional Sense	
There is no cartridge present in the drive, not even partially loaded.	NOT READY	3A00h	(medium not present)
The Parameter List Length results in the truncation of an attribute.	ILLEGAL REQUEST	1A00h	(parameter list length error)
The combination of Volume Number and Partition Number is not valid.	ILLEGAL REQUEST	2400h	(invalid field in CDB)
The parameter data attempts to change a read-only attribute, that is, one that has the Read-Only bit (see "MAM attribute data" on page 150) set to one when read with the READ ATTRIBUTE command. None of the attributes are changed.	ILLEGAL REQUEST	2600h	(invalid field in parameter list)

Description	Sense Key	Additional Sense	
The parameter data contains an attribute with an incorrect Attribute Length field value. None of the attributes are changed.	ILLEGAL REQUEST	2600h	(invalid field in parameter list)
The parameter data contains an attribute with an unsupported Attribute Value field value. None of the attributes are changed.	ILLEGAL REQUEST	2600h	(invalid field in parameter list)
The attributes are not in ascending order in the Parameter List. None of the attributes are changed.	ILLEGAL REQUEST	2600h	(invalid field in parameter list)
There is not enough space to write all the attributes to the MAM. None of the attributes are changed.	ILLEGAL REQUEST	5506h	(MAM full)

WRITE BUFFER 3Bh

Write Buffer is used to transfer data into memory on the drive for the purposes of diagnostics, tests or firmware upgrade. The data is placed into one of the drive buffers depending on the Mode and Buffer ID fields of the command.

△ **CAUTION:** Do not attempt to use the buffer modifying functions of this command unless you really know what you are doing. The buffer modifying functions are intended as a diagnostic aid to be used in conjunction with the Read Buffer command. It is not possible to modify data in the buffer so that it subsequently written to media because all host data is flushed before executing the command.

The firmware download functions are intended for use by manufacturing and by customers using upgrade utilities supplied by HP.

Pre-execution checks

Illegal Field Reservation Deferred Error Unit Attention

Command descriptor block

	7	6	5	4	3	2	1	0
0	Operation Code (3Bh)							
1	Reserved (0)			Mode				
2	Buffer ID							
3	(MSB)	Buffer Offset						
5								(LSB)
6	(MSB)	Parameter List Length						
8								(LSB)
9	Control							

CDB fields

Mode	This field can be set to one of the following values:	
	00h	The drive transfers a 4-byte header from the host (which should be set to zeros), followed by (*allocation length* – 4) bytes of data. The data is written into the buffer identified by the Buffer ID, starting from offset zero in the buffer. The Buffer ID and Buffer Offset must both be zero. Allocation Length must not exceed (*buffer size* + 4).
	02h	The drive transfers allocation length bytes of data from the host, bytes of data which is placed in the buffer indicated by Buffer ID, starting from Buffer Offset from the start of the buffer. No header is sent. The Buffer Offset and Allocation Length must be kept within the buffer size, and the Buffer ID must to set to one of the valid values.

	04h	This mode is used to transfer new firmware to the drive. The drive receives Allocation Length bytes of data from the host. The data is stored in the drive's buffer.The location in the buffer at which the data is written is determined by the firmware. The firmware image is divided into a number of blocks of data which are sent to the drive using multiple Write Buffer commands. All the firmware image data should be transferred using this mode. The Buffer ID and Buffer Offset are ignored.
	05h	This mode is used to indicate that the complete firmware image has been sent to the drive. This is the signal for entering the FLASH reprogramming stage of the firmware upgrade process. Once this command has been received, and the associated data stored in the buffer, the resident firmware checks the validity of the image that has been received. If this seems to be correct, the Firmware Upgrade operation will commence. If any faults are detected in the format of the image, the drive will report CHECK CONDITION to the host. The sense key is ABORTED COMMAND, and the additional sense is set to 2600h (invalid field in parameter list). **CAUTION:** Once this command has been sent and completed, the drive's power supply must not be interrupted until the drive has completed the firmware upgrade. The Buffer ID and Buffer Offset are ignored.
	0Ah/ 1Ah	This mode is used to write to the Echo Buffer. The Buffer ID and Offset are ignored.
Buffer ID	Specifies which buffer to read.	
	00h 02h 13h 20h 21h 22h 23h 24h 25h 26h 27h	Main buffer (RAM) Offset Boundary: 1 byte FC burst buffer (RAM) Offset boundary: 512 bytes, *or* SCSI burst buffer (RAM) Offset boundary: 4 bytes PCA EEPROM Offset Boundary: 1 byte Main buffer segment 0 (RAM) — see below for description Main buffer segment 1 (RAM) — see below for description Main buffer segment 2 (RAM) — see below for description Main buffer segment 3 (RAM) — see below for description Main buffer segment 4 (RAM) — see below for description Main buffer segment 5 (RAM) — see below for description Main buffer segment 6 (RAM) — see below for description Main buffer segment 7 (RAM) — see below for description
Buffer Offset	Where in the buffer the data should be written. This must be smaller than the size of the buffer and must obey the specified offset boundary. When downloading new firmware, this field is ignored.	
Parameter List Length	The amount of data. This must be smaller than the difference between the Buffer Offset field and the size of the buffer.	

Memory sizes

Main buffer memory

The Main Buffer memory is 128 MB.

Areas of the Main Buffer memory are used by the firmware. These should not be written to and should not be expected to retain values that are written to them. Any Write and Read Buffer tests can be performed while the drive is idle. If the drive is reading or writing, the data being written or read can be corrupted.

Since the drive has more than 16 MB of Main Buffer memory, additional buffer IDs have been defined to allow the whole buffer to be accessed in 16 MB segments. These are defined as follows:

Buffer ID	Address
20h	00000000h + Buffer Offset (same as Buffer ID 00h)
21h	01000000h + Buffer Offset (that is, +16 MB)
22h	02000000h + Buffer Offset (that is, +32 MB)
23h	03000000h + Buffer Offset (that is, +48 MB)
24h	04000000h + Buffer Offset (that is, +64 MB)
25h	05000000h + Buffer Offset (that is, +80 MB)
26h	06000000h + Buffer Offset (that is, +96 MB)
27h	07000000h + Buffer Offset (that is, +112 MB)

Main processor memory

Not all the Processor memory space is accessible. Take care when writing to any addresses within this buffer.

SCSI burst buffer

Addressable range from 00000h through 3F8000h.

PCA EEPROM

The write range is limited to 500h bytes, starting at 100h (TapeTools area).

WRITE FILEMARKS 10h

WRITE FILEMARKS causes the specified number of filemarks to be written beginning at the current logical position on tape.

If the Immed bit is set, GOOD status may be reported and the marks left in the data buffer. Otherwise, all buffered data and marks are written before status is reported.

If zero filemarks are to be written, the Immed bit must be zero. The drive writes any buffered data and marks to tape before reporting. This is the recommended way for a host to flush the buffer.

Pre-execution checks

Illegal Field	Reservation	Deferred Error	Unit Attention
Media Access	Media Write	Diagnostic Status	

Command descriptor block

	7	6	5	4	3	2	1	0
0	Operation Code (10h)							
1	Reserved (0)						WSmk	Immed
2	(MSB)	Number of Filemarks						
4								(LSB)
5	Control							

CDB fields

Immed	0	Status will not be returned until the operation is complete.
	1	The drive returns GOOD status following the pre-execution checks (that is, before the command starts executing).
WSmk	0	This bit is not supported and must be set to zero.
Number of Marks	0	Zero is valid only when immediate report is disabled.
	>0	This number of filemarks is to be written.

Specific status

Write Filemark sense is identical to status for the Write command.

Glossary

algorithm A rigorous set of rules for a procedure. In the context of data compression, the rules are for transforming the way data is represented.

ANSI American National Standards Institute, which sets standards for, amongst other things, SCSI and the safety of electrical devices.

BOM Beginning Of Media. The first point on the tape that can be accessed by the drive.

checksum The sum of a series of bytes written to the tape, which can be checked against the sum of the same series of bytes when the tape is read in order to identify errors.

compression A procedure in which data is transformed by the removal of redundant information in order to reduce the number of bits required to represent the data.

compression ratio A measure of how much compression has occurred, defined as the ratio of the amount of uncompressed data to the amount of compressed data into which it is transformed. The LTO-DC algorithm can typically achieve a compression ratio of between 2:1 and 4:1 depending on the nature of the data.

data set A fixed-size block of compressed host information.

data transfer phase After accepting a command from the host (initiator), the tape drive (target) sets the SCSI bus to transfer the data associated with the command. Information is transferred in one of three ways, depending on the negotiated settings between initiator and target. The simplest (and slowest) is *asynchronous*, where the target requests the transfer of each byte or word, then must wait for the initiator to signal that the byte or word has been transferred before it starts the next byte transfer. *Synchronous* transfers allow the target to request many transfers at once, up to a limit agreed between initiator and target at startup. Only once the "credit" has been used up, does the target have to pause and wait for the initiator to signal successful transfer of the words. Ultra320 SCSI introduces a faster still method called *paced* transfers; these are similar in concept to synchronous transfers. Asynchronous and synchronous transfers may take place either with eight-bit bytes ("narrow") or sixteen-bit words ("wide"). Paced transfers are always wide.

decompression A procedure in which the original data is generated from compressed data.

DSIT Data Set Information Table. Part of the data set that describes its contents.

ECMA European Computer Manufacturers Association. The European equivalent of ANSI.

enhanced commands SCSI commands that are vendor-unique and not part of the common SCSI set.

EOD End Of Data. An area that signifies the end of the valid data. If new data is written over a larger quantity of old data, it is possible for data to exist after EOD, but because it is after EOD, this old data is no longer valid.

EOM End Of Media format. The last usable point on the tape.

EW-EOM Early Warning End Of Media. A physical mark or a device-computed position on the tape that tells the drive that it is approaching EOM.

filemark A mark written by the host. It does not necessarily separate files; it is up to the host to assign a meaning to the mark.

filemark count The number of filemarks written since the beginning of the current tape up to and including the current group.

FRU Field Replaceable Unit, an assembly or group of components that is replaced in its entirety by Service Engineers when it contains a fault.

host The host computer system acting as controller for the drive.

immediate mode A mode of responding to SCSI commands where the drive or other peripheral does not wait until the command has finished before returning status information back to the host. For writing filemarks, Immediate mode can significantly improve the performance of systems that do not set the Immediate bit when sending a SCSI Write Filemarks command. On the other hand, data is not flushed to tape in response to a filemark command.

load The process in which the drive takes in an inserted cartridge and goes online.

LUN Logical Unit Number, by which different devices at a particular SCSI ID can be addressed individually. The drive has a fixed LUN of 0. In environments with ADI-B enabled, the autoloader has a fixed LUN of 1.

LVD Low-Voltage Differential

RAW *see* read-after-write

read-after-write RAW improves data integrity by reading data immediately after it is written and writing the data again if an error is found.

reserved Not generally available for use with the drive. A reserved field should contain all zero bits.

sense data Data returned after the execution of a SCSI command, telling the host whether the transaction was successful, and if not, what went wrong.

sequential access Sequential access devices store data sequentially in the order in which it is received. Tape devices are the most common sequential access devices. Devices such as disk drives are direct access devices, where data is stored in blocks, not necessarily sequentially. Direct access allows for speed of retrieval, but is significantly more costly.

spacing Spacing is moving along the tape over a specified number of blocks or filemarks, or to EOD, in order to find data quickly.

sub-data set One sixteenth of a data set

TapeAlert A set of 64 flags is held in the TapeAlert log that indicate faults or predicted faults with the drive or the media. By reading this log, host software can inform the user of existing or impending conditions, and can, for example, advise the user to change the tape.

vendor-unique The addition of commands to SCSI that are not included in the standard.

Index

A

abort handling 17
Aborted Command 199
additional sense codes 191, 193, 199
addressing, fibre channel 22
algorithms 245
  compression 104
  decompression 104
ANSI 9, 245
append error 205
ASC/Q 199
asynchronous data transfer 14
asynchronous transfers 245
attribute data 150
attributes
  ID values 151
  standard device types 151
  standard host type 154
  standard medium type 153
  writing 237

B

Bad LUN check 38
bit pointer 192
BLANK CHECK 199
blank media, met during read 143
blocks, spacing over 230
BOM 191, 245
  detected 200
  met during space 230
BOP, met during space 230
BPV bit 192
brackets, round, square 94
buffer
  echo 158, 241
  reading 158
  writing 237, 240
buffered data, flushed to tape 235
burst size 100, 101
bus device deferred errors 198
bus device reset 17, 196
bus inactivity limit 99, 101
bus parity errors 19
BUSY status 31, 34

C

capacity data 161
cartridge memory
  accessible in hold position 68, 102
  failed 69, 236
  size 160
cartridges
  faulty 205
  removal prevented 205
CDB 42
CD-ROM emulation 25
CD-ROM Emulation/Disaster Recovery Mode page 126
CD-ROM mode
  READ 10 command 146
  READ 6 command 145
  READ CAPACITY command 161
  READ TOC command 169
  SEEK command 223
  START/STOP command 232
CHECK CONDITION 31, 33
checksum 245
cleaning 192, 203
cleaning cartridge 203
Cleaning Needed sense data descriptor 195
clearing logs 73
CLN bit 192
command descriptor block 42
command phase error 204
commands 43
  ENABLE TRANSPORT LAYER RETRIES 210
  enhanced 245
  Enhanced FIRMWARE UPGRADE DOWNLOAD FIRMWARE SEGMENT 44
  Enhanced FIRMWARE UPGRADE REBOOT 46
  Enhanced FIRMWARE UPGRADE REPORT IMAGE INFO 47

ERASE 49
INQUIRY 50
LOAD/UNLOAD 68
LOCATE 71
LOG SELECT 73
LOG SENSE 75
MODE SELECT 93
MOVE MEDIUM 140
overlapping 205
PERSISTENT RESERVE IN 130
PERSISTENT RESERVE OUT 134
READ 141
READ 10 25, 146
READ 6 25, 145
READ ATTRIBUTE 147
READ BLOCK LIMITS 157
READ BUFFER 158
READ CAPACITY 25, 161
READ LOGGED-IN HOST TABLE 162
READ TOC 25, 169
RECEIVE DIAGNOSTIC RESULTS 171
RELEASE UNIT 173
REPORT DENSITY SUPPORT 175
REPORT DEVICE IDENTIFIER 179
REPORT LUNS 180
REPORT SUPPORTED OPCODES 182
REPORT SUPPORTED TASK MANAGEMENT FUNCTIONS 184
REPORT TARGET GROUPS 186
REQUEST SENSE 189
RESERVE UNIT 207
REWIND 209
SECURITY PROTOCOL IN 211
SECURITY PROTOCOL OUT 218
SEEK 25, 223
SEND DIAGNOSTIC 224
SET CAPACITY 226
SET DEVICE IDENTIFIER 228
SPACE 229
START/STOP 25, 232
supported 15
VERIFY 234
WRITE 235
WRITE ATTRIBUTE 237
WRITE BUFFER 240
WRITE FILEMARKS 243
compatibility 203
compression 245
algorithm 104
ratio 245
control byte 42
control field 42
Control Mode page 102
current sense 195
clearing 196

D

Data Compression
Capable bit 104
Characteristics Mode page 103
Enable bit 103
log 89
SDCA 105
data compression 245
algorithm 104
data decompression algorithm 104
Data Decompression Enable bit 104
data phase error 205
DATA PROTECT 199
data transfer
asynchronous 14
synchronous 14
data transfer phase 245
DCC bit 104
DCE bit 103
DDE bit 104
decompression 245
algorithm 104
Deferred Error check 38
DEFERRED ERROR sense 197
deferred errors 191, 193
descriptor format sense data 193
Device Configuration page 104
Device Status log 91
Device Time Mode page 123
Device Wellness Log page 90
Diagnostic Status check 39
diagnostics 171
failure 204
sending 224
disconnect strategy 19
Disconnect-Reconnect Mode page 99
documents, related 9
Drive Error Code sense data descriptor 195

drive error codes 192, 206
DSIT 245
DTD primary port status 82
DTD Status Log page 80

E

echo buffer 158, 241
ECMA 245
ejection failure 205
ENABLE TRANSPORT LAYER RETRIES command 210
  commands
    ENABLE TRANSPORT LAYER RETRIES 210
enhanced commands 245
Enhanced FIRMWARE UPGRADE DOWNLOAD FIRMWARE SEGMENT command 44
Enhanced FIRMWARE UPGRADE REBOOT command 46
Enhanced FIRMWARE UPGRADE REPORT IMAGE INFO command 47
EOD 245
  detected 200
  met during locate 72
  met during read 143
  met during space 230
  not found 200
  spacing to 230
EOM 191, 245
  detected 199
  met during locate 72
  met during read 143
  met during space 230
EOP, met during space 230
ERASE command 49
erase, failure 205
error codes 190, 206
  drive 192
errors
  bus device deferred 198
  command phase 204
  counters 78
  data phase 205
  deferred 191, 193
  invalid message 204
  message 204
  parity 204
  read, unrecovered 200
  sequential positioning 204
  write 200
  write append 205
  write-behind deferred 197
EVPD bit 50
EW-EOM 245
  met during locate 72
Extended Reset Mode page 125

F

failed cartridge memory 69, 236
FC 13
fibre channel
  addressing 22
  names 22
fibre channel operation 22
field pointer 192
field replaceable units 24
field, invalid 201
filemark count 246
filemarks 191, 246
  detected 199
  met during read 143
  met during space 230
  spacing over 230
  writing 243
Fixed bit 142, 235
Fixed Bit check 39
fixed format sense data 190
Flag Link check 39
flush, buffered data 235
format, corrupt 203
frames, response 33
FRUs 24, 246

G

GOOD status 31, 33
group code 42

H

HARD_RESET primitive 196
HARDWARE ERROR 198
heads, cleaning 192
hold bit 68
hold position 68, 102
Host 246

I

IDENTIFY message, invalid bits 204
identifying LUNs 19
ILI bit 191
Illegal Command check 39
Illegal Field check 39
ILLEGAL REQUEST 198
immediate mode 246
  during writing 235
Information Exceptions Mode page 120
Information sense data descriptor 194
INQUIRY
  command 50
  data pages 51
  Defined Identifiers page 57
  Device Identification page 56
  drive component revision levels pages 66
  extended INQUIRY data VPD page 60
  Management Network Address page 59
  manufacturer-assigned serial number page 65
  SCSI Ports VPD page 62
  sequential access device capabilities page 64
  TapeAlert supported flags page 65
  Unit Serial Number page 56
interface, SCSI 13

L

libraries, fibre channel addressing 24
Load bit 68
LOAD/UNLOAD command 68
Load/Unload Specific Status 69
loading 246
  failure 205
  tape 69
localization identifiers 155
LOCATE command 71
LOG SELECT command 73
LOG SENSE 75
  Data Compression Log page 89
  Device Status Log page 91
  Device Wellness Log page 90
  DTD Status Log page 80
  parameter pages 76
  Performance Data Log page 91
  Protocol-Specific Log page 85
  Read Error Counters Log page 78
  Requested Recovery Log page 85
  Sequential Access Device Log page 79
  Supported Log Pages page 77
  Tape Capacity Log page 89
  Tape Usage Log page 89
  TapeAlert Log page 87
  TapeAlert Response Log page 84
  Temperature Log page 79
  Write Error Counters Log pages 78
logical unit reset 196
logs
  clearing 73
  Data Compression 89
  Device Status 91
  parameter pages 76
  Performance Data 91
  reading 75
  Requested Recovery 85
  supported 77
  Tape Capacity 89
  Tape Usage 89
  TapeAlert 246
  TapeAlert Response 84
LUN 246
  becoming ready 200
  identifying 19
  not ready 200
  not self-configured 204
  not supported 201
LVD 246

M

MAM
  attribute data 150
  full 205
  reading 147
  write error 200
  writing 237
Margin Control mode sub-page 113
Mark bit 191
Media Access check 40
Media Information check 40
Media Write check 41
Medium Configuration Mode page 121
MEDIUM ERROR 198
Medium Partitions Mode page 106
messages 27

error 204
invalid 204
supported 14
microcode download 204
Mode Parameter pages 94
MODE SELECT
CD-ROM Emulation/Disaster Recovery Mode page 126
command 93
Control Mode page 102
Data Compression Characteristics page 103
Device Configuration page 104
Device Time Mode page 123
Disconnect-Reconnect page 99
Extended Reset Mode page 125
Information Exceptions Mode page 120
Medium Configuration page 121
Medium Partitions page 106
Mode Parameter header 96
Mode Parameter pages 94
Power Condition Mode page 119
Protocol-Specific Logical Unit Mode page
FC drives 107
SCSI drives 108
Protocol-Specific Logical Unit mode page
SAS drives 108
Protocol-Specific Port Mode page 108
Protocol-Specific Port mode page
SAS drives 116
SCSI drives 112
Read-Write Error Recovery page 98
Serial Number Override Mode page 122
monitoring condition 84, 85, 246
MOVE MEDIUM command 140
multi-initiator support 22

N

names, fibre channel 22
Negotiated Settings mode sub-page 114
NO SENSE 198
NOT READY 198

O

OBDR 25
one-button disaster recovery 25
opcode 42
unrecognized 201
overlapping commands 205

P

paced transfers 245
parallel protocol request 30
Parameter List check 41
parameter list, invalid field 201
parameter rounding 203
parity error 204
Performance Data log 91
PERSISTENT RESERVE IN command 130
PERSISTENT RESERVE OUT command 134
Physical Control and Discover mode sub-page 117
polling delay 81
Power Condition Mode page 119
power-on 196
PPR 30
pre-execution checks 38
Bad LUN 38
Deferred Error 38
Diagnostic Status 39
Fixed Bit 39
Flag Link 39
Illegal Command 39
Illegal Field 39
Media Access 40
Media Information 40
Media Write 41
Parameter List 41
Reservation 41
Unit Attention 41
prevent media removal 205
PREVENT/ALLOW MEDIUM REMOVAL 140
Protocol-Specific Log page 85
Protocol-Specific Logical Unit Mode page
FC drives 107
SCSI drives 108
Protocol-Specific Logical Unit mode page
SAS drives 108
Protocol-Specific Port Mode page 108
Protocol-Specific Port mode page
SAS drives 116
SCSI drives 112
Protocol-TapeAlert Log page 87

R

RAW 246
READ 10 command 25, 146
READ 6 command 25, 145
READ ATTRIBUTE command 147
READ BLOCK LIMITS command 157
READ BUFFER command 158
READ CAPACITY command 25, 161
READ command 141
Read Error Counters Log page 78
Read Keys service action 130
READ LOGGED-IN HOST TABLE command 162
Read Reservation service action 131
READ TOC command 25, 169
reading
  error 200
  failure 72, 143
  logs 75
Read-Write Error Recovery Mode page 98
RECEIVE DIAGNOSTIC RESULTS command 171
recovery procedures 85
RELEASE UNIT command 173
Report Capabilities service action 132
REPORT DENSITY SUPPORT command 175
REPORT DEVICE IDENTIFIER command 179
REPORT LUNS command 180
REPORT SUPPORTED OPCODES command 182
REPORT SUPPORTED TASK MANAGEMENT FUNCTIONS command 184
REPORT TARGET GROUPS command 186
Report Transfer Capabilities mode sub-page 116
REQUEST SENSE
  command 189
  data 190
Requested Recovery Log page 85
reselect failure 204
Reservation check 41
RESERVATION CONFLICT status 31, 34
reservations, releasing 173
RESERVE UNIT command 207
reserved field 42, 246
reset 196
  strategy 17
response frames 33
REWIND command 209
rounding 203

S

SAS 13, 15
  ENABLE TRANSPORT LAYER RETRIES command 210
  Log page 85
  supported task management functions 15
  task management functions 34
Saved Training Configuration Values mode sub-page 113
SCSI 9, 14
  commands 43
  interface 13
  parity error 204
  supported messages 14
SCSI Ports VPD Inquiry page 62
SCSI reset 196
SCSI-2, support 16
SCSI-3 13
SDTR 29
SECURITY PROTOCOL IN command 211
SECURITY PROTOCOL OUT command 218
SEEK command 25, 223
select failure 204
self-test 171, 224
SEND DIAGNOSTIC command 224
sense
  DEFERRED ERROR 197
  UNIT ATTENTION 196
sense data 246
  descriptor format 193
  fixed format 190
  management 195
sense data descriptors
  Cleaning Needed 195
  Drive Error Code 195
  Information 194
  Sense Key Specific 194
  Stream Commands 195
Sense Key Specific sense data descriptor 194
sense keys 191, 198
  specific bytes 191
sequential access 246
Sequential Access command set 14, 15
Sequential Access Device Log page 79
sequential positioning error 204
Serial Attached SCSI *see* SAS

Serial Number Override Mode page 122
service actions 148
  Read Keys 130
  Read Reservation 131
  Report Capabilities 132
SET CAPACITY command 226
SET DEVICE IDENTIFIER command 228
SILI 142
  bit 142
  error 143
SKSV bit 191
SPACE command 229
spacing 246
START/STOP command 25, 232
status
  BUSY 31, 34
  byte 30, 33
  CHECK CONDITION 31, 33
  GOOD 31, 33
  RESERVATION CONFLICT 31, 34
Stream Commands sense data descriptor 195
Summary 37
supported commands 15
Supported Log Pages page 77
synchronous data transfer 14
synchronous data transfer request 29
synchronous transfers 245

T

tape
  faulty 205
  incompatible 203
  loaded 196
  loading 69
  removal prevented 205
  unloading 69
Tape Capacity log 89
Tape Usage log 89
TapeAlert
  supported flags 65
TapeAlert log 246
TapeAlert Response Log page 84
task management functions 33
task management functions, supported 15
Temperature Log page 79
text localization identifiers 155
third-party, reserving for 173
TOC data 169

U

Unit Attention check 41
UNIT ATTENTION sense 196, 198
UNLOAD command 68
unloading tape 69

V

Vendor-Unique 246
VERIFY command 234
very high frequency data 79, 80
very high frequency polling delay 81
VHF 79, 80
Volume Overflow 199

W

WDTR 29
wide data transfer request 29
WORM cartridges 105
write
  append error 205
  error 200
WRITE ATTRIBUTE command 237
WRITE BUFFER command 240
WRITE command 235
Write Error Counters Log page 78
WRITE FILEMARKS command 243
write-behind deferred errors 197
write-protection 201
WSmk bit 243